# Air Atomizing Spray Nozzles

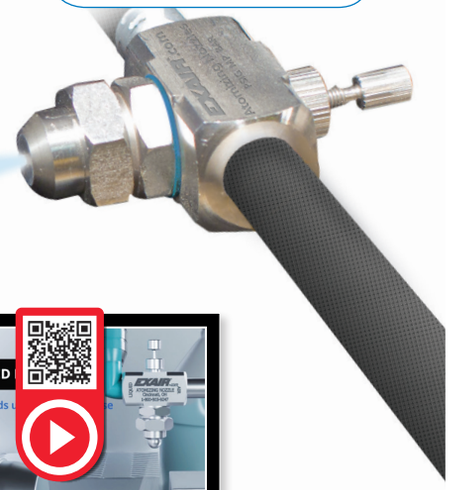

## All stainless steel construction for durability and corrosion resistance!

### What Are Atomizing Nozzles?

EXAIR's Atomizing Spray Nozzles atomize fluids (most commonly water) in a range of spray patterns for a variety of uses. They combine liquid and compressed air to create a mist of atomized liquid that can be easily adjusted to meet the needs of your application. All models use stainless steel construction for durability and corrosion resistance. Atomizing spray nozzles are available in 1/8 NPT, 1/4 NPT and 1/2 NPT sizes.

Built to Last 5 yr. WARRANTY
See our Terms & Conditions


SCAN & WATCH the video!
https://exair.co/04 lanv

*EXAIR's atomizing nozzles are available in 3 basic families:*

### Internal Mix:

Internal mix nozzles mix the liquid and air inside the air cap and produce the finest atomization. Internal mix nozzles can be used on liquids with a viscosity up to 300 cP. Both air and liquid sides are pressure fed.

### External Mix:

External mix nozzles have the highest flow rates and allow the air and liquid flows to be adjusted independently. These nozzles are best where precise liquid flow is needed. External mix nozzles can be used on liquids with a viscosity above 300 cP. Both air and liquid sides are pressure fed.

### Siphon Fed:

Siphon fed nozzles require no liquid pressure and can be used with gravity fed liquids, or liquids from a siphon height as much as 36 inches (91cm). Siphon fed nozzles can be used on liquids with a viscosity up to 200 cP.

### Why Atomizing Nozzles?

With EXAIR's atomizing nozzles, you can coat, cool, treat and paint a variety of products. Used with water, they are an efficient way to cool hot items in your automated process. These nozzles are also an excellent choice for dust mitigation.

Sound levels for the individual Atomizing Spray Nozzles are not provided. The fluid, pressure, surfaces being treated and surrounding enclosures used in conjunction with the Atomizing Spray Nozzle to form the system will determine the actual sound levels (which can vary greatly). Max temperature is 400°F (204°C) for Atomizing Spray Nozzles. All atomizing nozzles are CE compliant.

**A Model SR1010SS is used to supply a cooling mist for a drilling operation.**

**(2) Model EB1030SS atomizing nozzles are used to give a final sanitary rinse prior to labeling wine bottles.**

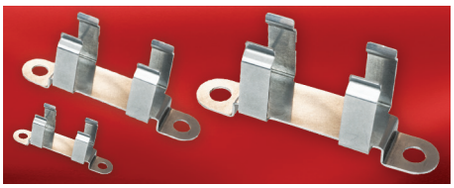

**Mounting Brackets are available - Model 901786 for 1/8 NPT, Model 901318 for 1/4 NPT and Model 901556 for 1/2 NPT atomizing nozzles.**

### Applications

- Washing
- Rinsing
- Coating
- Cooling
- Quenching
- Wetting (moistening)
- Humidification
- Dust Control

### Advantages

- Fully adjustable
- Maximizes liquid dispersion
- Minimizes liquid consumption
- All stainless steel construction
- Compact
- Versatile
- Interchangeable liquid and air caps
- Minimizes air consumption
- Fine atomization

An INTELLIGENT COMPRESSED AIR® Product

## Internal Mix Narrow Angle Round Pattern - 1/8 NPT

**Model: AN8010SS**
**Material:** Type 303 Stainless Steel

**Model: AN8020SS**
**Material:** Type 303 Stainless Steel

**Model: AN8030SS**
**Material:** Type 303 Stainless Steel

**Model: AN8040SS**
**Material:** Type 303 Stainless Steel

**Model: AN8050SS**
**Material:** Type 303 Stainless Steel

### Model AN8010SS, AN8020SS, AN8030SS, AN8040SS and AN8050SS

1/8 NPT internal mix narrow angle round pattern nozzles are excellent for spraying a concentrated mist of liquid. Because of the versatility of their adjustments, they can apply a heavy coat up close or send a very fine mist over 16 feet away! They are often used for precision application of lubricants during assembly, or marking items as they move through an assembly line. Narrow angle round pattern atomizing nozzles are capable of delivering the most liquid of any of our 1/8 NPT internal mix atomizing nozzles.

**For pressure fed applications not requiring independent air and liquid control.**

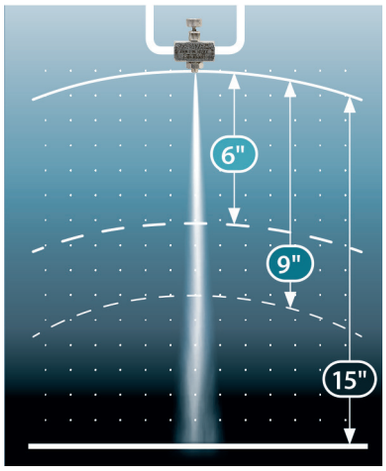


**The modifiable spray pattern can generate a heavy or precision engineered mist for distances over 16 feet!**

### Dimensions and Airflow Pattern

DOWNLOAD drawings at EXAIR.com

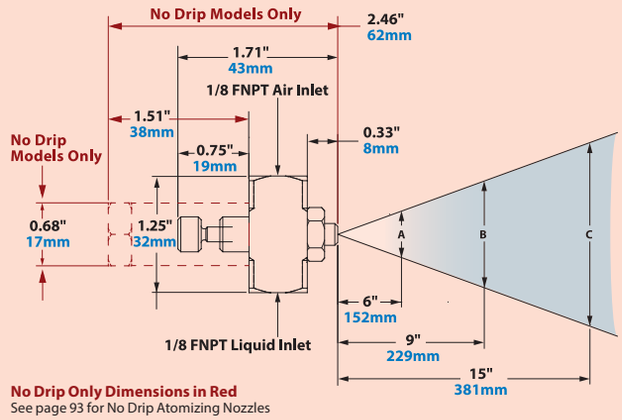


**No Drip Only Dimensions in Red**
See page 93 for No Drip Atomizing Nozzles

| Model | 10 PSI/0.7 BAR Liquid | | | | | | 20 PSI/1.4 BAR Liquid | | | | | | 30 PSI/2.1 BAR Liquid | | | | | | 40 PSI/2.8 BAR Liquid | | | | | | 60 PSI/4.1 BAR Liquid | | | | | | Spray Dimensions | | | | | | | | | | | | | |
|---|---|---|---|---|---|---|---|---|---|---|---|---|---|---|---|---|---|---|---|---|---|---|---|---|---|---|---|---|---|---|---|---|---|---|---|---|---|---|---|---|---|---|---|---|
| | Air Pressure PSI/BAR | | GPH/LPH | | SCFM/SLPM | | Air Pressure PSI/BAR | | GPH/LPH | | SCFM/SLPM | | Air Pressure PSI/BAR | | GPH/LPH | | SCFM/SLPM | | Air Pressure PSI/BAR | | GPH/LPH | | SCFM/SLPM | | Air Pressure PSI/BAR | | GPH/LPH | | SCFM/SLPM | | Pressure | | | | Width | | | | | | Max. Depth feet/m | | |
| | | | | | | | | | | | | | | | | | | | | | | | | | | | | | | | Air PSI/BAR | | Liquid PSI/BAR | | A | | B | | C | | | | |
| | | | | | | | | | | | | | | | | | | | | | | | | | | | | | | | | | | | in | cm | in | cm | in | cm | | | |
| AN8010SS | 10 | 0.7 | 0.97 | 3.7 | 0.25 | 7.1 | 14 | 1.0 | 1.83 | 6.9 | 0.32 | 9.1 | 24 | 1.7 | 1.97 | 7.5 | 0.52 | 14.7 | 32 | 2.2 | 2.23 | 8.4 | 0.67 | 19.0 | 50 | 3.4 | 2.63 | 10.0 | 0.98 | 27.7 | 10 | 0.7 | 10 | 0.7 | 3 | 8 | 3.5 | 9 | 4.5 | 11 | 3.5 | 1.1 | AN8010SS |
| | 12 | 0.8 | 0.80 | 3.0 | 0.32 | 9.1 | 18 | 1.2 | 1.5 | 5.7 | 0.39 | 11.0 | 28 | 1.9 | 1.7 | 6.4 | 0.59 | 16.7 | 36 | 2.5 | 1.97 | 7.5 | 0.74 | 20.9 | 54 | 3.7 | 2.37 | 9.0 | 1.02 | 28.9 | 18 | 1.2 | 20 | 1.4 | 3 | 8 | 4 | 10 | 5 | 13 | 5 | 1.5 | |
| | 14 | 1.0 | 0.60 | 2.3 | 0.4 | 11.3 | 22 | 1.5 | 1.27 | 4.8 | 0.52 | 14.7 | 32 | 2.2 | 1.37 | 5.2 | 0.71 | 20.1 | 40 | 2.8 | 1.67 | 6.3 | 0.84 | 23.8 | 58 | 4.0 | 2.1 | 7.9 | 1.12 | 31.7 | 32 | 2.2 | 30 | 2.1 | 3 | 8 | 4 | 10 | 5.5 | 14 | 7 | 2.1 | |
| | — | — | — | — | — | — | 26 | 1.8 | 0.73 | 2.8 | 0.67 | 19.0 | 38 | 2.6 | 0.8 | 3.0 | 0.93 | 26.3 | 48 | 3.3 | 1.00 | 3.8 | 1.09 | 30.9 | 66 | 4.6 | 1.7 | 6.4 | 1.21 | 34.3 | 48 | 3.3 | 40 | 2.8 | 3 | 8 | 4.5 | 11 | 6 | 15 | 8 | 2.4 | |
| AN8020SS | 10 | 0.7 | 1.33 | 5.0 | 0.43 | 12.2 | 18 | 1.2 | 1.83 | 6.9 | 0.71 | 20.1 | 24 | 1.7 | 2.27 | 8.6 | 0.91 | 25.8 | 30 | 2.1 | 2.63 | 10.0 | 1.05 | 29.7 | 40 | 2.8 | 3.33 | 12.6 | 1.31 | 37.1 | 10 | 0.7 | 10 | 0.7 | 2 | 5 | 3 | 8 | 4 | 10 | 5 | 1.5 | AN8020SS |
| | 12 | 0.8 | 1.17 | 4.4 | 0.5 | 14.2 | 20 | 1.4 | 1.73 | 6.5 | 0.75 | 21.2 | 28 | 1.9 | 2.07 | 7.8 | 0.99 | 28.0 | 34 | 2.3 | 2.47 | 9.3 | 1.12 | 31.7 | 46 | 3.2 | 3.13 | 11.8 | 1.4 | 39.6 | 20 | 1.4 | 20 | 1.4 | 2.5 | 6 | 3.5 | 9 | 4.5 | 11 | 7 | 2.1 | |
| | 14 | 1.0 | 1.03 | 3.9 | 0.6 | 17.0 | 22 | 1.5 | 1.63 | 6.2 | 0.84 | 23.8 | 32 | 2.2 | 1.9 | 7.2 | 1.09 | 30.9 | 38 | 2.6 | 2.33 | 8.8 | 1.20 | 34.0 | 52 | 3.6 | 2.87 | 10.9 | 1.6 | 45.3 | 32 | 2.2 | 30 | 2.1 | 2.5 | 6 | 3.5 | 9 | 4.5 | 11 | 7 | 2.1 | |
| | — | — | — | — | — | — | — | — | — | — | — | — | 40 | 2.8 | 1.57 | 5.9 | 1.45 | 41.0 | 48 | 3.3 | 1.87 | 7.1 | 1.53 | 43.3 | 70 | 4.8 | 2.2 | 8.3 | 2.2 | 62.3 | 70 | 4.8 | 60 | 4.1 | 3.5 | 9 | 4.5 | 11 | 6.5 | 17 | 10 | 3.0 | |
| AN8030SS | 12 | 0.8 | 2.20 | 8.3 | 0.47 | 13.3 | 22 | 1.5 | 2.9 | 11.0 | 0.75 | 21.2 | 30 | 2.1 | 3.7 | 14.0 | 0.96 | 27.2 | 36 | 2.5 | 4.47 | 16.9 | 1.09 | 30.9 | 48 | 3.3 | 6.3 | 23.8 | 1.28 | 36.2 | 12 | 0.8 | 10 | 0.7 | 2 | 5 | 3 | 8 | 4.5 | 11 | 6 | 1.8 | AN8030SS |
| | 16 | 1.1 | 1.60 | 6.1 | 0.56 | 15.9 | 26 | 1.8 | 2.43 | 9.2 | 0.82 | 23.2 | 34 | 2.3 | 3.2 | 12.1 | 1.00 | 28.3 | 40 | 2.8 | 4.17 | 15.8 | 1.12 | 31.7 | 52 | 3.6 | 5.87 | 22.2 | 1.3 | 36.8 | 26 | 1.8 | 20 | 1.4 | 2.5 | 6 | 3.5 | 9 | 5 | 13 | 6 | 1.8 | |
| | 24 | 1.7 | 0.67 | 2.5 | 0.95 | 26.9 | 38 | 2.6 | 1.13 | 4.3 | 1.35 | 38.2 | 46 | 3.2 | 1.8 | 6.8 | 1.45 | 41.0 | 52 | 3.6 | 2.67 | 10.1 | 1.49 | 42.2 | 64 | 4.4 | 4.56 | 17.3 | 1.59 | 45.0 | 52 | 3.6 | 40 | 2.8 | 3 | 8 | 4 | 10 | 6 | 15 | 11 | 3.4 | |
| | 28 | 1.9 | 0.47 | 1.8 | 1.07 | 30.3 | 42 | 2.9 | 0.77 | 2.9 | 1.53 | 43.3 | 52 | 3.6 | 1.4 | 5.3 | 1.76 | 49.8 | 60 | 4.1 | 2.00 | 7.6 | 1.87 | 52.9 | 70 | 4.8 | 3.8 | 14.4 | 1.84 | 52.1 | 70 | 4.8 | 60 | 4.1 | 4 | 10 | 5 | 13 | 6.5 | 17 | 11 | 3.4 | |
| AN8040SS | 16 | 1.1 | 4.87 | 9.6 | 2.54 | 71.9 | 28 | 1.9 | 6.60 | 25.0 | 3.64 | 103.0 | 40 | 2.8 | 7.83 | 29.7 | 4.70 | 132.9 | 48 | 3.3 | 9.33 | 35.3 | 5.40 | 153 | 65 | 4.5 | 12.0 | 45.4 | 6.70 | 190 | 16 | 1.1 | 10 | 0.7 | 2.5 | 6 | 3 | 8 | 4 | 10 | 10 | 3.0 | AN8040SS |
| | 20 | 1.4 | 3.57 | 11.0 | 2.92 | 82.6 | 32 | 2.2 | 5.60 | 21.2 | 3.98 | 112.6 | 44 | 3.0 | 6.87 | 26.0 | 4.99 | 141.3 | 55 | 3.8 | 8.17 | 30.9 | 5.98 | 169 | 75 | 5.2 | 10.8 | 41.0 | 7.57 | 214 | 32 | 2.2 | 20 | 1.4 | 3 | 8 | 4 | 10 | 5.5 | 14 | 11 | 3.4 | |
| | 26 | 1.8 | 1.87 | 13.6 | 3.60 | 101.8 | 44 | 3.0 | 2.43 | 9.2 | 5.16 | 146.1 | 60 | 4.1 | 2.80 | 10.6 | 6.43 | 182.0 | 80 | 5.5 | 2.53 | 9.6 | 8.58 | 243 | 90 | 6.2 | 8.17 | 30.9 | 9.03 | 256 | 80 | 5.5 | 40 | 2.8 | 3 | 8 | 4 | 10 | 5.5 | 14 | 13 | 4.0 | |
| | 30 | 2.1 | 1.03 | 15.4 | 4.06 | 115.0 | 50 | 3.4 | 1.33 | 5.0 | 5.92 | 167.7 | 70 | 4.8 | 1.23 | 4.7 | 7.78 | 220.4 | 90 | 6.2 | 1.27 | 4.8 | 9.61 | 272 | 100 | 6.9 | 6.13 | 23.2 | 9.90 | 280 | 100 | 6.9 | 60 | 4.1 | 3.5 | 9 | 4.5 | 11 | 6 | 15 | 15 | 4.6 | |
| AN8050SS | 12 | 0.8 | 7.60 | 28.8 | 1.76 | 49.8 | 20 | 1.4 | 11.63 | 44.0 | 2.37 | 67.1 | 30 | 2.1 | 13.5 | 51.1 | 3.42 | 96.8 | 38 | 2.6 | 15.4 | 58.2 | 3.99 | 113 | 54 | 3.7 | 18.9 | 71.7 | 5.17 | 146 | 12 | 0.8 | 10 | 0.7 | 3 | 8 | 4 | 10 | 6 | 15 | 9 | 2.7 | AN8050SS |
| | 14 | 1.0 | 6.10 | 23.1 | 1.97 | 55.8 | 22 | 1.5 | 10.53 | 39.9 | 2.85 | 80.7 | 34 | 2.3 | 11.37 | 43.0 | 3.92 | 111.0 | 42 | 2.9 | 14.1 | 53.3 | 4.50 | 127 | 60 | 4.1 | 17.2 | 65.1 | 5.83 | 165 | 22 | 1.5 | 20 | 1.4 | 3 | 8 | 4 | 10 | 6 | 15 | 11 | 3.4 | |
| | 16 | 1.1 | 4.80 | 18.2 | 2.18 | 61.7 | 24 | 1.7 | 9.43 | 35.7 | 3.11 | 88.0 | 38 | 2.6 | 9.07 | 34.3 | 4.4 | 124.6 | 46 | 3.2 | 12.3 | 46.7 | 4.95 | 140 | 65 | 4.5 | 15.7 | 59.4 | 6.45 | 183 | 38 | 2.6 | 30 | 2.1 | 3 | 8 | 4.5 | 11 | 6 | 15 | 14 | 4.3 | |
| | — | — | — | — | — | — | 32 | 2.2 | 5.07 | 19.2 | 4.19 | 118.6 | 46 | 3.2 | 5.6 | 21.2 | 5.52 | 156.3 | 56 | 3.9 | 7.7 | 29.0 | 6.24 | 177 | 85 | 5.9 | 8.13 | 30.8 | 8.58 | 243 | 85 | 5.9 | 60 | 4.1 | 4 | 10 | 5 | 13 | 6.5 | 17 | 16 | 4.9 | |

# Air Atomizing Spray Nozzles

## Internal Mix Wide Angle Round Pattern - 1/8 NPT

**Model: AW8010SS**
**Material:** Type 303 Stainless Steel

**Model: AW8020SS**
**Material:** Type 303 Stainless Steel

**Model: AW8030SS**
**Material:** Type 303 Stainless Steel

**Model: AW8040SS**
**Material:** Type 303 Stainless Steel



### Model AW8010SS, AW8020SS, AW8030SS and AW8040SS

EXAIR's 1/8 NPT internal mix wide angle round pattern atomizing nozzles are great for covering a broad area. They can be adjusted for a light mist or a heavy soaking spray. They are popular for dust mitigation, humidification, and cooling of products, people or livestock in a broad area. These nozzles are also perfect for applying a coating to parts packed in large containers, for example, misting a container of stamped steel parts with oil to prevent oxidation prior to shipment.

**For pressure fed applications not requiring independent air and liquid control.**

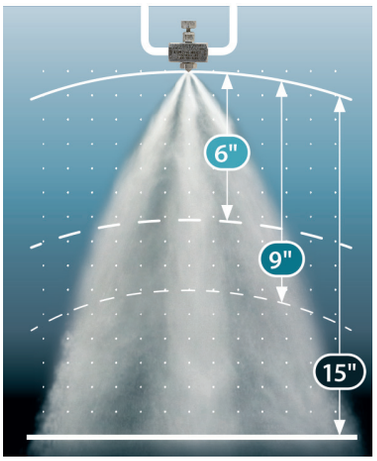


**1/8 NPT Internal Mix Wide Angle Round Pattern atomizing nozzles are perfect for covering broad areas. They are ideal for dust migration, humidification and a variety of cooling applications.**

### Dimensions and Airflow Pattern

DOWNLOAD drawings at EXAIR.com

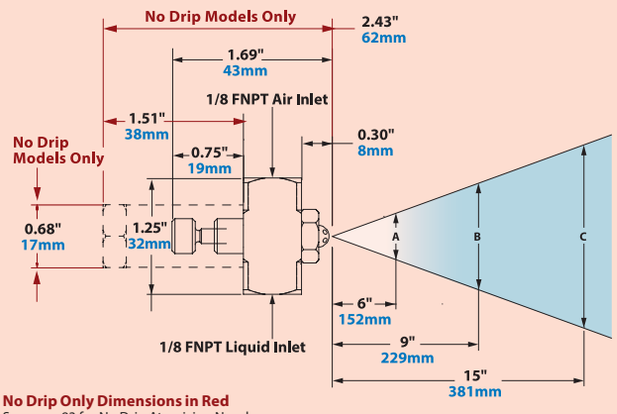


**No Drip Only Dimensions in Red**
See page 93 for No Drip Atomizing Nozzles

| Model | 10 PSI/0.7 BAR Liquid | | | | | | 20 PSI/1.4 BAR Liquid | | | | | | 30 PSI/2.1 BAR Liquid | | | | | | 40 PSI/2.8 BAR Liquid | | | | | | 60 PSI/4.1 BAR Liquid | | | | | | Spray Dimensions | | | | | | | | | | | | | | |
|---|---|---|---|---|---|---|---|---|---|---|---|---|---|---|---|---|---|---|---|---|---|---|---|---|---|---|---|---|---|---|---|---|---|---|---|---|---|---|---|---|---|---|---|---|---|
| | Air Pressure PSI/BAR | | GPH/ LPH | | SCFM/ SLPM | | Air Pressure PSI/BAR | | GPH/ LPH | | SCFM/ SLPM | | Air Pressure PSI/BAR | | GPH/ LPH | | SCFM/ SLPM | | Air Pressure PSI/BAR | | GPH/ LPH | | SCFM/ SLPM | | Air Pressure PSI/BAR | | GPH/ LPH | | SCFM/ SLPM | | Pressure: Air PSI/ BAR | | Pressure: Liquid PSI/BAR | | Width A in | Width A cm | Width B in | Width B cm | Width C in | Width C cm | Max. Depth feet/m | | |
| AW8010SS | 8 | 0.6 | 1.10 | 4.2 | 0.31 | 8.8 | 14 | 1.0 | 1.60 | 6.1 | 0.33 | 9.4 | 22 | 1.5 | 2.00 | 7.6 | 0.43 | 12.3 | 30 | 2.1 | 2.00 | 7.6 | 0.61 | 17.2 | 44 | 3.0 | 2.60 | 9.8 | 0.69 | 19.7 | 8 | 0.6 | 10 | 0.7 | 5 | 13 | 6.5 | 17 | 7.5 | 19 | 2 | 0.6 | AW8010SS |
| | 10 | 0.7 | 0.70 | 2.6 | 0.27 | 7.6 | 16 | 1.1 | 1.40 | 5.3 | 0.43 | 12.1 | 26 | 1.8 | 1.80 | 6.8 | 0.52 | 14.7 | 34 | 2.3 | 1.80 | 6.8 | 0.65 | 18.4 | 48 | 3.3 | 2.20 | 8.3 | 0.87 | 24.6 | 16 | 1.1 | 20 | 1.4 | 6 | 15 | 8 | 20 | 10 | 25 | 3 | 0.9 | |
| | --- | --- | --- | --- | --- | --- | 22 | 1.5 | 0.60 | 2.3 | 0.60 | 16.9 | --- | --- | --- | --- | --- | --- | --- | --- | --- | --- | --- | --- | 65 | 4.5 | 0.60 | 2.3 | 1.56 | 44.2 | 26 | 1.8 | 30 | 2.1 | 7 | 18 | 9.0 | 23 | 11 | 28 | 4 | 1.2 | |
| | --- | --- | --- | --- | --- | --- | --- | --- | --- | --- | --- | --- | --- | --- | --- | --- | --- | --- | --- | --- | --- | --- | --- | --- | --- | --- | --- | --- | --- | --- | 65 | 4.5 | 60 | 4.1 | 7 | 18 | 10 | 25 | 12 | 30 | 4 | 1.2 | |
| AW8020SS | 12 | 0.8 | 3.73 | 14.1 | 1.65 | 46.7 | 22 | 1.5 | 5.07 | 19.2 | 2.28 | 64.7 | 30 | 2.1 | 6.40 | 24.2 | 2.67 | 75.4 | 38 | 2.6 | 8.00 | 30.3 | 3.05 | 86.2 | 54 | 3.7 | 9.83 | 37.2 | 3.81 | 108 | 12 | 0.8 | 10 | 0.7 | 8 | 20 | 9.5 | 24 | 11 | 28 | 6 | 1.8 | AW8020SS |
| | 14 | 1.0 | 3.00 | 11.4 | 1.90 | 53.9 | 24 | 1.7 | 4.43 | 16.8 | 2.54 | 71.9 | 32 | 2.2 | 6.00 | 22.7 | 2.92 | 82.6 | 42 | 2.9 | 6.73 | 25.5 | 3.55 | 100.6 | 56 | 3.9 | 9.33 | 35.3 | 4.06 | 115 | 24 | 1.7 | 20 | 1.4 | 8 | 20 | 10 | 25 | 13 | 33 | 8 | 2.4 | |
| | --- | --- | --- | --- | --- | --- | 26 | 1.8 | 3.83 | 14.5 | 2.79 | 79.0 | 36 | 2.5 | 4.93 | 18.7 | 3.43 | 97.0 | 46 | 3.2 | 5.77 | 21.8 | 4.06 | 115.0 | 60 | 4.1 | 8.33 | 31.5 | 4.57 | 129 | 36 | 2.5 | 30 | 2.1 | 8 | 20 | 10 | 25 | 13 | 33 | 10 | 3.0 | |
| | --- | --- | --- | --- | --- | --- | --- | --- | --- | --- | --- | --- | --- | --- | --- | --- | --- | --- | 52 | 3.6 | 4.27 | 16.2 | 4.82 | 136.5 | 75 | 5.2 | 5.47 | 20.7 | 6.47 | 183 | 75 | 5.2 | 60 | 4.1 | 8 | 20 | 10 | 25 | 13 | 33 | 14 | 4.3 | |
| AW8030SS | 10 | 0.7 | 6.37 | 24.1 | 1.3 | 36.8 | 20 | 1.4 | 7.87 | 29.8 | 1.87 | 52.8 | 30 | 2.1 | 10.0 | 37.9 | 2.52 | 71.3 | 40 | 2.8 | 11.3 | 42.9 | 3.04 | 86.0 | 56 | 3.9 | 15.0 | 56.8 | 3.21 | 90.9 | 12 | 0.8 | 10 | 0.7 | 7.5 | 19 | 10 | 25 | 13.5 | 34 | 8 | 2.3 | AW8030SS |
| | 12 | 0.8 | 5.10 | 19.3 | 1.65 | 46.7 | 22 | 1.5 | 6.73 | 25.5 | 2.17 | 61.4 | 32 | 2.2 | 9.33 | 35.3 | 2.73 | 77.4 | 42 | 2.9 | 10.3 | 39.1 | 3.30 | 93.4 | 58 | 4.0 | 14.5 | 54.9 | 3.91 | 111 | 22 | 1.5 | 20 | 1.4 | 7.5 | 19 | 10 | 25 | 13.5 | 34 | 9 | 2.7 | |
| | 14 | 1.0 | 3.47 | 13.1 | 1.91 | 54.1 | 24 | 1.7 | 5.93 | 22.5 | 2.43 | 68.8 | 36 | 2.5 | 6.83 | 25.9 | 3.39 | 95.8 | 46 | 3.2 | 8.33 | 31.5 | 3.95 | 111.8 | 65 | 4.5 | 12.0 | 45.4 | 4.90 | 139 | 36 | 2.5 | 30 | 2.1 | 7.5 | 19 | 10 | 25 | 13.5 | 34 | 10 | 3.0 | |
| | --- | --- | --- | --- | --- | --- | 26 | 1.8 | 4.80 | 18.2 | 2.65 | 75.0 | 40 | 2.8 | 4.07 | 15.4 | 4.04 | 114.3 | 50 | 3.4 | 5.80 | 22.0 | 4.47 | 126.6 | 75 | 5.2 | 6.73 | 25.5 | 6.38 | 181 | 50 | 3.4 | 40 | 2.8 | 7.5 | 19 | 10 | 25 | 13.5 | 34 | 11 | 3.4 | |
| AW8040SS | 18 | 1.2 | 11.3 | 42.9 | 2.89 | 81.8 | 30 | 2.1 | 14.5 | 54.9 | 4.16 | 117.8 | 44 | 3.0 | 16.3 | 61.8 | 5.53 | 156.5 | 60 | 4.1 | 18.0 | 68.1 | 7.04 | 199.3 | 80 | 5.5 | 22.3 | 84.5 | 8.89 | 252 | 18 | 1.2 | 10 | 0.7 | 8 | 20 | 10.5 | 27 | 12 | 30 | 9 | 2.7 | AW8040SS |
| | 26 | 1.8 | 9.33 | 35.3 | 3.74 | 105.9 | 38 | 2.6 | 12.7 | 47.9 | 5.04 | 142.8 | 55 | 3.8 | 15.0 | 56.8 | 6.72 | 190.2 | 80 | 5.5 | 14.7 | 55.5 | 9.18 | 259.9 | 90 | 6.2 | 21.0 | 79.5 | 9.89 | 280 | 38 | 2.6 | 20 | 1.4 | 8 | 20 | 10 | 25 | 12 | 30 | 11 | 3.4 | |
| | 34 | 2.3 | 6.67 | 25.2 | 4.58 | 129.7 | 60 | 4.1 | 6.7 | 25.2 | 7.27 | 205.7 | 80 | 5.5 | 8.67 | 32.8 | 9.18 | 259.9 | 100 | 6.9 | 10.0 | 37.9 | 11.1 | 315.1 | --- | --- | --- | --- | --- | --- | 55 | 3.8 | 30 | 2.1 | 7.5 | 19 | 10 | 25 | 11 | 28 | 14 | 4.3 | |
| | --- | --- | --- | --- | --- | --- | --- | --- | --- | --- | --- | --- | --- | --- | --- | --- | --- | --- | --- | --- | --- | --- | --- | --- | --- | --- | --- | --- | --- | --- | 80 | 5.5 | 40 | 2.8 | 7.5 | 19 | 10 | 25 | 11 | 28 | 15 | 4.6 | |


For Technical Assistance, Call an EXAIR Application Engineer 1-800-903-9247
Toll Free FAX (866) 329-3924 • E-mail: techelp@exair.com • www.exair.com

An INTELLIGENT COMPRESSED AIR® Product

## Internal Mix Flat Fan Pattern - 1/8 NPT

**Model: AF8010SS**
**Material:** Type 303 Stainless Steel

**Model: AF8020SS**
**Material:** Type 303 Stainless Steel

**Model: AF8030SS**
**Material:** Type 303 Stainless Steel

**Model: AF8040SS**
**Material:** Type 303 Stainless Steel

### Model AF8010SS, AF8020SS, AF8030SS and AF8040SS

1/8 NPT internal mix flat fan pattern atomizing nozzles are designed with efficiency in mind. Especially good for vertical or horizontal assembly lines, their broad thin pattern makes efficient use of your expensive liquids. Their output can be adjusted for a very light film or a heavy coat of whatever liquid you're working with. Whether it's applying paint to hanging sheet metal, or using a water mist to cool a laminate web, flat fan atomizing nozzles cover a wide flat area, ideal for products moving on a conveyor.

**For pressure fed applications not requiring independent air and liquid control.**

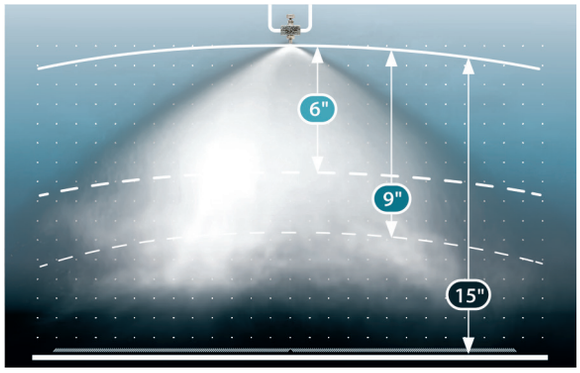


**1/8 NPT Internal Mix Flat Fan atomizing nozzles can apply a light or heavy film coat to products moving on a conveyor.**



## Dimensions and Airflow Pattern

DOWNLOAD drawings at EXAIR.com

**No Drip Dimensions In Red**
See page 93 for No Drip Atomizing Nozzles

* Model AF9010SS & AF9020SS 2.48" / 63mm
** Model AF8010SS & AF8020SS 1.74" / 44mm
***Model AF8010SS & AF8020SS 0.36" / 9mm

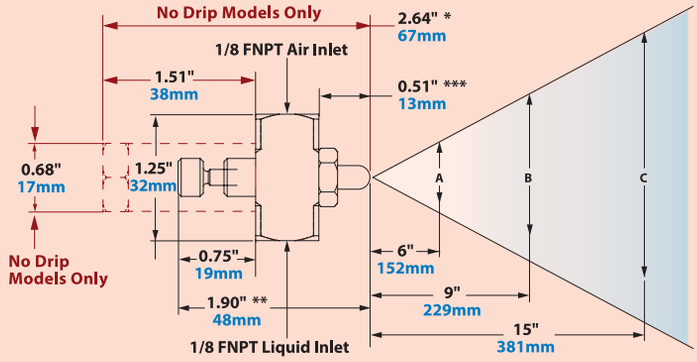


| Model | 10 PSI/0.7 BAR Liquid: Air Pressure PSI/BAR | | GPH/LPH | | SCFM/SLPM | | 20 PSI/1.4 BAR Liquid: Air Pressure PSI/BAR | | GPH/LPH | | SCFM/SLPM | | 30 PSI/2.1 BAR Liquid: Air Pressure PSI/BAR | | GPH/LPH | | SCFM/SLPM | | 40 PSI/2.8 BAR Liquid: Air Pressure PSI/BAR | | GPH/LPH | | SCFM/SLPM | | 60 PSI/4.1 BAR Liquid: Air Pressure PSI/BAR | | GPH/LPH | | SCFM/SLPM | | Spray Dimensions: Pressure: Air PSI/BAR | | Liquid PSI/BAR | | Width: A in | A cm | B in | B cm | C in | C cm | Max. Depth feet/m | | Model |
|---|---|---|---|---|---|---|---|---|---|---|---|---|---|---|---|---|---|---|---|---|---|---|---|---|---|---|---|---|---|---|---|---|---|---|---|---|---|---|---|---|---|---|---|---|
| AF8010SS | 10 | 0.7 | 1.60 | 6.1 | 0.71 | 20.0 | 18 | 1.2 | 2.13 | 8.1 | 1.11 | 31.5 | 28 | 1.9 | 2.63 | 10.0 | 1.53 | 43.4 | 38 | 2.6 | 2.87 | 10.9 | 1.95 | 55.1 | 55 | 3.8 | 3.47 | 13.1 | 2.57 | 72.7 | 10 | 0.7 | 10 | 0.7 | 14 | 36 | 18 | 46 | 25 | 64 | 1 | 0.3 | AF8010SS |
| | 14 | 1.0 | 1.43 | 5.4 | 0.76 | 21.6 | 26 | 1.8 | 1.87 | 7.1 | 1.44 | 40.7 | 36 | 2.5 | 2.20 | 8.3 | 1.94 | 54.8 | 46 | 3.2 | 2.57 | 9.7 | 2.28 | 64.7 | 75 | 5.2 | 2.93 | 11.1 | 3.42 | 96.9 | 26 | 1.8 | 20 | 1.4 | 15 | 38 | 22 | 56 | 30 | 76 | 2 | 0.6 | |
| | 22 | 1.5 | 0.93 | 3.5 | 1.03 | 29.1 | 40 | 2.8 | 1.40 | 5.3 | 1.94 | 55.0 | 55 | 3.8 | 1.63 | 6.2 | 2.67 | 75.4 | 70 | 4.8 | 2.07 | 7.8 | 3.17 | 89.8 | 100 | 6.9 | 2.37 | 9.0 | 4.33 | 123 | 36 | 2.5 | 30 | 2.1 | 14 | 36 | 22 | 56 | 30 | 76 | 2 | 0.6 | |
| | --- | --- | --- | --- | --- | --- | --- | --- | --- | --- | --- | --- | --- | --- | --- | --- | --- | --- | --- | --- | --- | --- | --- | --- | --- | --- | --- | --- | --- | --- | 100 | 6.9 | 60 | 4.1 | 22 | 56 | 30 | 76 | 46 | 117 | 3 | 0.9 | |
| AF8020SS | 18 | 1.2 | 1.53 | 5.8 | 1.04 | 29.5 | 30 | 2.1 | 2.30 | 8.7 | 2.30 | 65.1 | 42 | 2.9 | 2.87 | 10.9 | 2.05 | 57.9 | 55 | 3.8 | 3.53 | 13.4 | 2.56 | 72.5 | 75 | 5.2 | 4.27 | 16.2 | 3.25 | 91.9 | 18 | 1.2 | 10 | 0.7 | 14 | 36 | 17 | 43 | 24 | 61 | 2 | 0.6 | AF8020SS |
| | 22 | 1.5 | 1.40 | 5.3 | 1.17 | 33.2 | 36 | 2.5 | 1.90 | 7.2 | 1.90 | 53.8 | 46 | 3.2 | 2.60 | 9.8 | 2.20 | 62.2 | 65 | 4.5 | 2.67 | 10.1 | 2.98 | 84.4 | 85 | 5.9 | 3.67 | 13.9 | 3.69 | 105 | 36 | 2.5 | 20 | 1.4 | 18 | 46 | 24 | 61 | 32 | 81 | 3 | 0.9 | |
| | 26 | 1.8 | 1.00 | 3.8 | 1.29 | 36.5 | 40 | 2.8 | 1.63 | 6.2 | 1.63 | 46.2 | 50 | 3.4 | 2.20 | 8.3 | 2.38 | 67.5 | --- | --- | --- | --- | --- | --- | --- | --- | --- | --- | --- | --- | 46 | 3.2 | 30 | 2.1 | 23 | 58 | 29 | 74 | 37 | 94 | 3 | 0.9 | |
| | --- | --- | --- | --- | --- | --- | 44 | 3.0 | 0.85 | 3.2 | 0.85 | 24.1 | --- | --- | --- | --- | --- | --- | --- | --- | --- | --- | --- | --- | --- | --- | --- | --- | --- | --- | 55 | 3.8 | 40 | 2.8 | 30 | 76 | 34 | 86 | 47 | 119 | 4 | 1.2 | |
| AF8030SS | 16 | 1.1 | 7.83 | 29.6 | 1.42 | 40.3 | 28 | 1.9 | 10.8 | 41.0 | 2.00 | 56.7 | 38 | 2.6 | 13.0 | 49.2 | 2.54 | 71.8 | 46 | 3.2 | 14.7 | 55.5 | 2.94 | 83.1 | 65 | 4.5 | 17.0 | 64.4 | 4.00 | 113 | 16 | 1.1 | 10 | 0.7 | 21 | 53 | 26 | 66 | 32 | 81 | 3 | 0.9 | AF8030SS |
| | 18 | 1.2 | 7.83 | 29.6 | 1.56 | 44.1 | 30 | 2.1 | 10.7 | 40.4 | 2.14 | 60.4 | 40 | 2.8 | 13.0 | 49.2 | 2.67 | 75.6 | 50 | 3.4 | 14.2 | 53.6 | 3.20 | 90.7 | 70 | 4.8 | 16.7 | 63.1 | 4.14 | 117 | 30 | 2.1 | 20 | 1.4 | 24 | 61 | 30 | 76 | 39 | 99 | 4 | 1.2 | |
| | 20 | 1.4 | 7.50 | 28.4 | 1.69 | 47.9 | 32 | 2.2 | 10.3 | 39.1 | 2.24 | 63.5 | 42 | 2.9 | 12.5 | 47.3 | 2.80 | 79.3 | 52 | 3.6 | 14.2 | 53.6 | 3.28 | 92.9 | 75 | 5.2 | 16.5 | 62.5 | 4.54 | 128 | 42 | 2.9 | 30 | 2.1 | 29 | 74 | 36 | 91 | 44 | 112 | 4 | 1.2 | |
| | 24 | 1.7 | 7.43 | 28.1 | 1.82 | 51.6 | 36 | 2.5 | 10.3 | 39.1 | 2.49 | 70.5 | 46 | 3.2 | 12.5 | 47.3 | 2.94 | 83.1 | 56 | 3.9 | 13.7 | 51.7 | 3.47 | 98.2 | 85 | 5.9 | 16.2 | 61.2 | 4.76 | 135 | 56 | 3.9 | 40 | 2.8 | 32 | 81 | 39 | 99 | 47 | 119 | 4 | 1.2 | |
| AF8040SS | 12 | 0.8 | 11.2 | 42.3 | 1.08 | 30.5 | 22 | 1.5 | 14.8 | 56.2 | 1.56 | 44.1 | 34 | 2.3 | 17.8 | 67.5 | 2.15 | 60.9 | 46 | 3.2 | 20.3 | 77.0 | 2.71 | 76.7 | 65 | 4.5 | 28.0 | 106 | 3.61 | 102 | 12 | 0.8 | 10 | 0.7 | 20 | 51 | 24 | 61 | 31 | 79 | 3 | 0.9 | AF8040SS |
| | 14 | 1.0 | 10.3 | 39.1 | 1.19 | 33.6 | 26 | 1.8 | 14.3 | 54.3 | 1.72 | 48.7 | 38 | 2.6 | 17.3 | 65.6 | 2.28 | 64.5 | 50 | 3.4 | 19.7 | 74.4 | 2.92 | 82.8 | 75 | 5.2 | 26.3 | 99.7 | 4.14 | 117 | 26 | 1.8 | 20 | 1.4 | 25 | 64 | 29 | 74 | 36 | 91 | 4 | 1.2 | |
| | 20 | 1.4 | 8.33 | 31.5 | 1.51 | 42.7 | 34 | 2.3 | 12.3 | 46.7 | 2.15 | 60.9 | 48 | 3.3 | 15.3 | 58.0 | 2.75 | 77.9 | 60 | 4.1 | 18.3 | 69.4 | 3.36 | 95.0 | 90 | 6.2 | 23.3 | 88.3 | 4.80 | 136 | 60 | 4.1 | 40 | 2.8 | 26 | 66 | 31 | 79 | 42 | 107 | 6 | 1.8 | |
| | --- | --- | --- | --- | --- | --- | 38 | 2.6 | 11.7 | 44.2 | 2.43 | 68.7 | 50 | 3.4 | 14.8 | 56.2 | 2.88 | 81.6 | 70 | 4.8 | 17.0 | 64.4 | 3.91 | 111 | 100 | 6.9 | 22.7 | 85.8 | 5.33 | 151 | 100 | 6.9 | 60 | 4.1 | 32 | 81 | 39 | 99 | 44 | 112 | 7 | 2.1 | |

# Air Atomizing Spray Nozzles

## External Mix Narrow Angle Flat Fan Pattern - 1/8 NPT

**Model: EF8010SS**
**Material:** Type 303 Stainless Steel

**Model: EF8020SS**
**Material:** Type 303 Stainless Steel

**Model: EF8030SS**
**Material:** Type 303 Stainless Steel

**Model: EF8040SS**
**Material:** Type 303 Stainless Steel

**Model: EF8050SS**
**Material:** Type 303 Stainless Steel



### Model EF8010SS, EF8020SS, EF8030SS, EF8040SS and EF8050SS

1/8 NPT external mix narrow angle flat fan pattern nozzles are great where liquid is needed over a more concentrated area than the internal mix flat fan nozzles. Since they are external mix, airflow and liquid flow can be controlled independently. External mix flat fan pattern nozzles are the best choice where thicker liquids for a heavier coating are needed over a narrow band, such as a paint line.

**For pressure fed applications with independent air and liquid control**

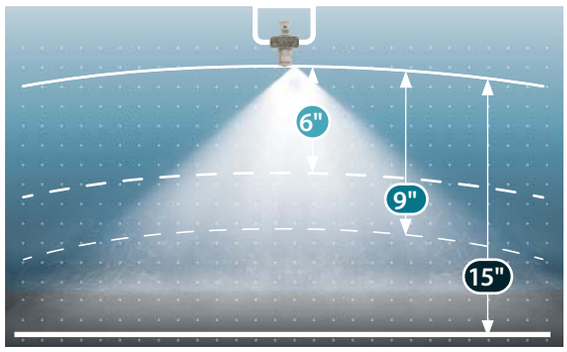


**1/8 NPT External Mix Flat Fan atomizing nozzles are very versatile. They can apply a light or heavy film coating to products on a variety of different products.**

**Model EF8010SS applies lubricant to a drawer slide.**

## Dimensions and Airflow Pattern

**DOWNLOAD** drawings at EXAIR.com

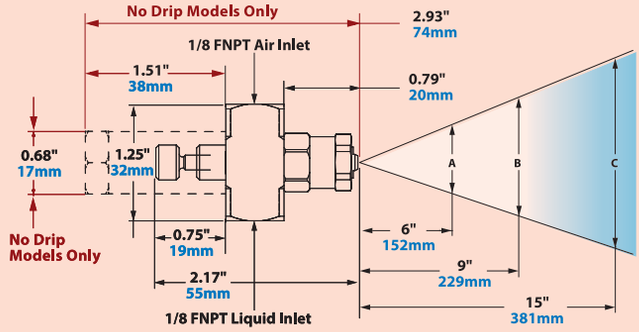


**No Drip Dimensions In Red**
See page 93 for No Drip Atomizing Nozzles

| Model | 10 PSI/0.7 BAR Liquid | | | | | | 20 PSI/1.4 BAR Liquid | | | | | | 30 PSI/2.1 BAR Liquid | | | | | | 40 PSI/2.8 BAR Liquid | | | | | | Spray Dimensions | | | | | | | | | | | | |
|---|---|---|---|---|---|---|---|---|---|---|---|---|---|---|---|---|---|---|---|---|---|---|---|---|---|---|---|---|---|---|---|---|---|---|---|---|---|
| | Air Pressure PSI/BAR | | GPH/LPH | | SCFM/SLPM | | Air Pressure PSI/BAR | | GPH/LPH | | SCFM/SLPM | | Air Pressure PSI/BAR | | GPH/LPH | | SCFM/SLPM | | Air Pressure PSI/BAR | | GPH/LPH | | SCFM/SLPM | | Pressure: Air PSI/BAR | | Pressure: Liquid PSI/BAR | | Width A in | Width A cm | Width B in | Width B cm | Width C in | Width C cm | Max. Depth feet/m | | |
| EF8010SS | 10 | 0.7 | 1.22 | 4.6 | 1.20 | 34.0 | 10 | 0.7 | 1.64 | 6.2 | 1.20 | 34.0 | 10 | 0.7 | 1.82 | 6.9 | 1.20 | 34.0 | 10 | 0.7 | 2.00 | 7.6 | 1.20 | 34.0 | 10 | 0.7 | 10 | 0.7 | 4 | 10 | 5 | 13 | 4 | 10 | 4 | 1.2 | EF8010SS |
| | 30 | 2.1 | | | 2.29 | 64.8 | 30 | 2.1 | | | 2.29 | 64.8 | 30 | 2.1 | | | 2.29 | 64.8 | 30 | 2.1 | | | 2.29 | 64.8 | 30 | 2.1 | 20 | 1.4 | 4 | 10 | 5 | 13 | 6 | 15 | 6 | 1.8 | |
| | 50 | 3.4 | | | 3.41 | 96.5 | 50 | 3.4 | | | 3.41 | 96.5 | 50 | 3.4 | | | 3.41 | 96.5 | 50 | 3.4 | | | 3.41 | 96.5 | 30 | 2.1 | 30 | 2.1 | 4 | 10 | 5 | 13 | 6 | 15 | 6 | 1.8 | |
| | --- | --- | | | --- | --- | --- | --- | | | --- | --- | --- | --- | | | --- | --- | --- | --- | | | --- | --- | 50 | 3.4 | 40 | 2.8 | 4 | 10 | 5 | 13 | 8 | 20 | 8 | 2.4 | |
| EF8020SS | 10 | 0.7 | 2.00 | 7.6 | 1.20 | 34.0 | 10 | 0.7 | 2.56 | 9.7 | 1.20 | 34.0 | 10 | 0.7 | 2.67 | 10.1 | 1.20 | 34.0 | 10 | 0.7 | 2.93 | 11.1 | 1.20 | 34.0 | 10 | 0.7 | 10 | 0.7 | 3 | 8 | 4.5 | 11 | 4 | 10 | 4 | 1.2 | EF8020SS |
| | 30 | 2.1 | | | 2.29 | 64.8 | 30 | 2.1 | | | 2.29 | 64.8 | 30 | 2.1 | | | 2.29 | 64.8 | 30 | 2.1 | | | 2.29 | 64.8 | 30 | 2.1 | 20 | 1.4 | 3 | 8 | 4.5 | 11 | 6 | 15 | 6 | 1.8 | |
| | 50 | 3.4 | | | 3.41 | 96.5 | 50 | 3.4 | | | 3.41 | 96.5 | 50 | 3.4 | | | 3.41 | 96.5 | 50 | 3.4 | | | 3.41 | 96.5 | 30 | 2.1 | 30 | 2.1 | 3 | 8 | 4.5 | 11 | 7 | 18 | 7 | 2.1 | |
| | --- | --- | | | --- | --- | --- | --- | | | --- | --- | --- | --- | | | --- | --- | --- | --- | | | --- | --- | 50 | 3.4 | 40 | 2.8 | 3 | 8 | 4.5 | 11 | 8 | 20 | 8 | 2.4 | |
| EF8030SS | 10 | 0.7 | 4.47 | 16.9 | 1.20 | 34.0 | 10 | 0.7 | 5.60 | 21.2 | 1.20 | 34.0 | 10 | 0.7 | 6.30 | 23.8 | 1.20 | 34.0 | 10 | 0.7 | 7.67 | 29.0 | 1.20 | 34.0 | 10 | 0.7 | 10 | 0.7 | 4 | 10 | 5 | 13 | 5 | 13 | 5 | 1.5 | EF8030SS |
| | 30 | 2.1 | | | 2.29 | 64.8 | 30 | 2.1 | | | 2.29 | 64.8 | 30 | 2.1 | | | 2.29 | 64.8 | 30 | 2.1 | | | 2.29 | 64.8 | 30 | 2.1 | 20 | 1.4 | 4 | 10 | 5 | 13 | 7 | 18 | 7 | 2.1 | |
| | 50 | 3.4 | | | 3.41 | 96.5 | 50 | 3.4 | | | 3.41 | 96.5 | 50 | 3.4 | | | 3.41 | 96.5 | 50 | 3.4 | | | 3.41 | 96.5 | 30 | 2.1 | 30 | 2.1 | 4 | 10 | 5 | 13 | 8 | 20 | 8 | 2.4 | |
| | --- | --- | | | --- | --- | --- | --- | | | --- | --- | --- | --- | | | --- | --- | --- | --- | | | --- | --- | 50 | 3.4 | 40 | 2.8 | 4 | 10 | 5 | 13 | 9 | 23 | 9 | 2.7 | |
| EF8040SS | 20 | 1.4 | 8.67 | 32.8 | 1.95 | 55.2 | 20 | 1.4 | 10.75 | 40.7 | 1.95 | 55.2 | 20 | 1.4 | 13.00 | 49.2 | 1.95 | 55.2 | 20 | 1.4 | 14.42 | 54.6 | 1.95 | 55.2 | 20 | 1.4 | 10 | 0.7 | 5.5 | 14 | 7 | 18 | 7 | 18 | 7 | 2.1 | EF8040SS |
| | 30 | 2.1 | | | 2.50 | 70.8 | 30 | 2.1 | | | 2.5 | 70.8 | 30 | 2.1 | | | 2.5 | 70.8 | 30 | 2.1 | | | 2.5 | 70.8 | 30 | 2.1 | 20 | 1.4 | 5.5 | 14 | 7 | 18 | 9 | 23 | 9 | 2.7 | |
| | 40 | 2.8 | | | 3.13 | 88.6 | 40 | 2.8 | | | 3.13 | 88.6 | 40 | 2.8 | | | 3.13 | 88.6 | 40 | 2.8 | | | 3.13 | 88.6 | 40 | 2.8 | 30 | 2.1 | 5.5 | 14 | 7 | 18 | 10 | 25 | 10 | 3.0 | |
| | 50 | 3.4 | | | 3.68 | 104.2 | 50 | 3.4 | | | 3.68 | 104.2 | 50 | 3.4 | | | 3.68 | 104.2 | 50 | 3.4 | | | 3.68 | 104 | 50 | 3.4 | 40 | 2.8 | 5.5 | 14 | 7 | 18 | 11 | 28 | 11 | 3.4 | |
| EF8050SS | 30 | 2.1 | 12.6 | 47.7 | 2.28 | 64.5 | 30 | 2.1 | 16.6 | 62.8 | 2.28 | 64.5 | 30 | 2.1 | 20.17 | 76.4 | 2.28 | 64.5 | 30 | 2.1 | 25.00 | 94.6 | 2.28 | 64.5 | 30 | 2.1 | 10 | 0.7 | 7 | 18 | 9 | 23 | 9 | 23 | 9 | 2.7 | EF8050SS |
| | 40 | 2.8 | | | 2.84 | 80.4 | 40 | 2.8 | | | 2.84 | 80.4 | 40 | 2.8 | | | 2.84 | 80.4 | 40 | 2.8 | | | 2.84 | 80.4 | 40 | 2.8 | 20 | 1.4 | 7 | 18 | 9 | 23 | 10 | 25 | 10 | 3.0 | |
| | 60 | 4.1 | | | 3.87 | 109.6 | 60 | 4.1 | | | 3.87 | 109.6 | 60 | 4.1 | | | 3.87 | 109.6 | 60 | 4.1 | | | 3.87 | 110 | 70 | 4.8 | 40 | 2.8 | 7 | 18 | 9 | 23 | 12 | 30 | 12 | 3.7 | |
| | 70 | 4.8 | | | 4.45 | 126.0 | 70 | 4.8 | | | 4.45 | 126.0 | 70 | 4.8 | | | 4.45 | 126.0 | 70 | 4.8 | | | 4.45 | 126 | | | | | | | | | | | | | |

An INTELLIGENT COMPRESSED AIR® Product

## Siphon Fed Round Pattern - 1/8 NPT

**Model: SR8010SS**
**Material:** Type 303 Stainless Steel

**Model: SR8020SS**
**Material:** Type 303 Stainless Steel

**Model: SR8030SS**
**Material:** Type 303 Stainless Steel

**Model: SR8040SS**
**Material:** Type 303 Stainless Steel

**Model: SR8050SS**
**Material:** Type 303 Stainless Steel

### Model SR8010SS, SR8020SS, SR8030SS, SR8040SS and SR8050SS

1/8 NPT siphon fed round pattern nozzles are great where no liquid pressure is available and a thin coating is needed at a specific area. Flow rate is adjustable via the adjusting valve. Siphon nozzles work best with a suction height of 36" (914mm) or less. Since these nozzles are siphon fed, the compressed airflow draws the liquid in and mixes it internally. Liquid flow is dependent both on the gravity or suction height and the airflow. Siphon fed round pattern nozzles provide the most liquid flow of any siphon fed nozzle.

**Siphon or gravity fed for non-pressurized applications.**

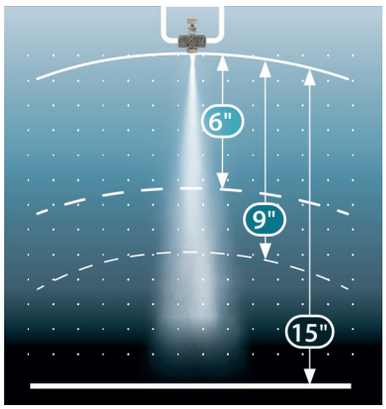


The amount of liquid applied by the Siphon Fed atomizing nozzles varies depending on valve or inlet pressures.

### Dimensions and Airflow Pattern

DOWNLOAD drawings at EXAIR.com

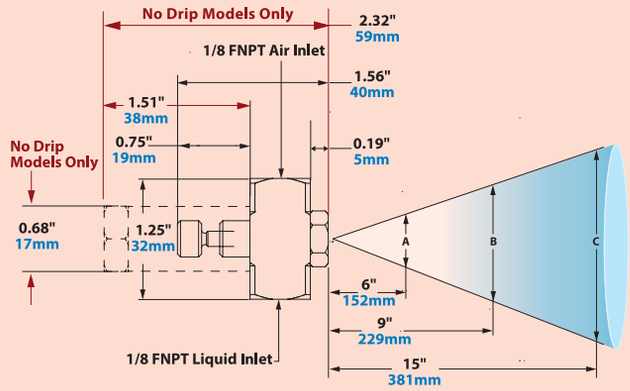


**No Drip Only Dimensions in Red**
See page 93 for No Drip Atomizing Nozzles

**Liquid Flow in GPH/LPH**

| Model | Air Pressure PSI | Air Pressure BAR | Air SCFM | Air SLPM | Gravity Head 18" | 46cm | 12" | 30cm | 6" | 15cm | Siphon Height 4" | 10cm | 8" | 20cm | 12" | 30cm | 24" | 61cm | 36" | 91cm |
|---|---|---|---|---|---|---|---|---|---|---|---|---|---|---|---|---|---|---|---|---|
| SR8010SS | 10 | 0.7 | 0.48 | 13.6 | 0.35 | 1.3 | 0.33 | 1.2 | 0.27 | 1.0 | 0.21 | 0.8 | 0.21 | 0.8 | 0.17 | 0.7 | --- | --- | --- | --- |
| | 20 | 1.4 | 0.68 | 19.2 | 0.41 | 1.6 | 0.40 | 1.5 | 0.43 | 1.6 | 0.27 | 1.0 | 0.26 | 1.0 | 0.24 | 0.9 | 0.23 | 0.9 | --- | --- |
| | 40 | 2.8 | 1.35 | 38.3 | 0.49 | 1.9 | 0.48 | 1.8 | 0.46 | 1.7 | 0.35 | 1.3 | 0.32 | 1.2 | 0.30 | 1.1 | 0.26 | 1.0 | 0.23 | 0.9 |
| | 60 | 4.1 | 2.12 | 59.9 | 0.53 | 2.0 | 0.52 | 2.0 | 0.50 | 1.9 | 0.40 | 1.5 | 0.42 | 1.6 | 0.33 | 1.3 | 0.28 | 1.1 | 0.25 | 0.9 |
| SR8020SS | 10 | 0.7 | 0.59 | 16.7 | 0.61 | 2.3 | 0.53 | 2.0 | 0.48 | 1.8 | 0.35 | 1.3 | 0.33 | 1.2 | 0.24 | 0.9 | --- | --- | --- | --- |
| | 20 | 1.4 | 1.16 | 32.8 | 0.73 | 2.8 | 0.7 | 2.6 | 0.66 | 2.5 | 0.58 | 2.2 | 0.55 | 2.1 | 0.4 | 1.5 | 0.35 | 1.3 | --- | --- |
| | 40 | 2.8 | 1.9 | 53.8 | 0.88 | 3.3 | 0.8 | 3.0 | 0.76 | 2.9 | 0.66 | 2.5 | 0.58 | 2.2 | 0.53 | 2.0 | 0.45 | 1.7 | 0.38 | 1.4 |
| | 60 | 4.1 | 2.62 | 74.2 | 0.96 | 3.6 | 0.92 | 3.5 | 0.82 | 3.1 | 0.75 | 2.8 | 0.68 | 2.6 | 0.6 | 2.3 | 0.52 | 2.0 | 0.46 | 1.7 |
| SR8030SS | 10 | 0.7 | 0.55 | 15.6 | 1.31 | 5.0 | 1.22 | 4.6 | 0.96 | 3.6 | 0.76 | 2.9 | 0.61 | 2.3 | 0.53 | 2.0 | --- | --- | --- | --- |
| | 20 | 1.4 | 1.06 | 30.0 | 1.66 | 6.3 | 1.59 | 6.0 | 1.23 | 4.7 | 1.07 | 4.1 | 1.13 | 4.3 | 0.92 | 3.5 | 0.76 | 2.9 | --- | --- |
| | 40 | 2.8 | 1.86 | 52.7 | 1.89 | 7.2 | 1.8 | 6.8 | 1.53 | 5.8 | 1.34 | 5.1 | 1.49 | 5.6 | 1.19 | 4.5 | 1.05 | 4.0 | 0.82 | 3.1 |
| | 60 | 4.1 | 2.45 | 69.4 | 1.98 | 7.5 | 1.86 | 7.0 | 1.58 | 6.0 | 1.46 | 5.5 | 1.74 | 6.6 | 1.34 | 5.1 | 1.29 | 4.9 | 1.04 | 3.9 |
| SR8040SS | 10 | 0.7 | 1.40 | 39.5 | 2.65 | 10.0 | 2.43 | 9.2 | 2.12 | 8.0 | 1.22 | 4.6 | 1.00 | 3.8 | --- | --- | --- | --- | --- | --- |
| | 20 | 1.4 | 2.03 | 57.5 | 3.01 | 11.4 | 2.86 | 10.8 | 2.53 | 9.6 | 1.78 | 6.7 | 1.57 | 6.0 | 1.37 | 5.2 | --- | --- | --- | --- |
| | 40 | 2.8 | 3.17 | 89.8 | 3.58 | 13.6 | 3.55 | 13.4 | 3.29 | 12.0 | 2.54 | 9.6 | 2.48 | 9.4 | 2.18 | 8.2 | 1.98 | 7.5 | 1.22 | 4.6 |
| | 60 | 4.1 | 4.42 | 125 | 4.09 | 15.5 | 3.99 | 15.1 | 3.75 | 14.0 | 3.03 | 11.5 | 2.98 | 11.3 | 2.85 | 11.0 | 2.59 | 9.8 | 2.11 | 8.0 |
| SR8050SS | 10 | 0.7 | 1.84 | 52.1 | 1.84 | 7.0 | 4.16 | 15.7 | 3.83 | 14.0 | 3.28 | 12.4 | 3.1 | 11.7 | 2.45 | 9.3 | 0.74 | 2.8 | --- | --- |
| | 20 | 1.4 | 2.93 | 82.9 | 2.93 | 11.1 | 5.53 | 20.9 | 3.7 | 14.0 | 4.12 | 15.6 | 3.51 | 13.3 | 3.98 | 15.0 | 3.35 | 12.7 | 1.8 | 6.8 |
| | 40 | 2.8 | 4.02 | 114 | 4.02 | 15.2 | 5.83 | 22.1 | 4.39 | 17.0 | 4.6 | 17.4 | 4.31 | 16.3 | 5.08 | 19.0 | 4.16 | 15.7 | 2.93 | 11.1 |
| | 60 | 4.1 | 5.12 | 145 | 5.12 | 19.4 | 5.92 | 22.4 | 5.56 | 21.0 | 5.5 | 20.8 | 5.09 | 19.3 | 5.33 | 20.0 | 5.18 | 19.6 | 3.84 | 14.5 |

**Spray Dimensions at 8" (20cm) Siphon Height**

| Model | Air Pressure PSI | Air Pressure BAR | Width A in | Width A cm | Width B in | Width B cm | Width C in | Width C cm | Max. Depth feet | Max. Depth m |
|---|---|---|---|---|---|---|---|---|---|---|
| SR8010SS | 10 | 0.7 | 1.5 | 4 | 2 | 5 | 3 | 8 | 1.5 | 0.5 |
| | 20 | 1.4 | 1.5 | 4 | 2 | 5 | 3 | 8 | 1.5 | 0.5 |
| | 40 | 2.8 | 1.5 | 4 | 2 | 5 | 3 | 8 | 2 | 0.6 |
| | 60 | 4.1 | 1.5 | 4 | 2 | 5 | 3 | 8 | 3 | 0.9 |
| SR8020SS | 10 | 0.7 | 1.5 | 4 | 2 | 5 | 3 | 8 | 1.5 | 0.5 |
| | 20 | 1.4 | 1.5 | 4 | 2 | 5 | 3 | 8 | 2 | 0.6 |
| | 40 | 2.78 | 1.5 | 4 | 2 | 5 | 3 | 8 | 3 | 0.9 |
| | 60 | 4.1 | 1.5 | 4 | 2 | 5 | 3 | 8 | 4 | 1.2 |
| SR8030SS | 10 | 0.7 | 1.5 | 4 | 2 | 5 | 3 | 8 | 1.5 | 0.5 |
| | 20 | 1.4 | 1.5 | 4 | 2 | 5 | 3 | 8 | 3 | 0.9 |
| | 40 | 2.78 | 1.5 | 4 | 2 | 5 | 3 | 8 | 4 | 1.2 |
| | 60 | 4.1 | 1.5 | 4 | 2 | 5 | 3 | 8 | 5 | 1.5 |
| SR8040SS | 10 | 0.7 | 1.5 | 4 | 2 | 5 | 3 | 8 | 3 | 0.9 |
| | 20 | 1.4 | 1.5 | 4 | 2 | 5 | 3 | 8 | 4 | 1.2 |
| | 40 | 2.78 | 1.5 | 4 | 2 | 5 | 3 | 8 | 4 | 1.2 |
| | 60 | 4.1 | 1.5 | 4 | 2 | 5 | 3 | 8 | 5 | 1.5 |
| SR8050SS | 20 | 1.4 | 1.5 | 4 | 2 | 5 | 3 | 8 | 5 | 1.5 |
| | 40 | 2.8 | 1.5 | 4 | 2 | 5 | 3 | 8 | 7 | 2.1 |
| | 60 | 4.1 | 1.5 | 4 | 2 | 5 | 3 | 8 | 9 | 2.7 |
| | 80 | 5.5 | 1.5 | 4 | 2 | 5 | 3 | 8 | 10 | 3.0 |

# Air Atomizing Spray Nozzles

## Siphon Fed Flat Fan Pattern - 1/8 NPT

**Model: SF8010SS**
**Material:** Type 303 Stainless Steel

**Model: SF8020SS**
**Material:** Type 303 Stainless Steel

**Model: SF8030SS**
**Material:** Type 303 Stainless Steel

### Model SF8010SS, SF8020SS and SF8030SS

1/8 NPT siphon fed flat fan pattern nozzles are great where no liquid pressure is available and a thin coating is needed over a wide band. Flow rate is adjustable via the adjusting valve. Siphon nozzles work best with a suction height of 36" (914mm) or less. Since these nozzles are siphon fed, the compressed airflow draws the liquid in and mixes it internally. Liquid flow is dependent both on the gravity or suction height and the airflow. Siphon fed flat fan pattern nozzles are the best choice where liquid is needed over a broad band such as a moving assembly line.

**Siphon or gravity fed for non-pressurized applications.**

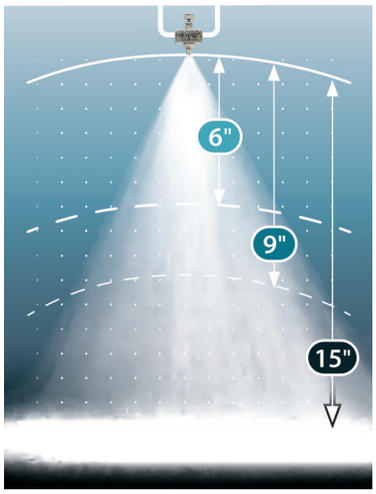


**1/8 NPT Siphon Fed Flat Fan atomizing nozzles apply a light coating of liquid over a wide band.**

### Dimensions and Airflow Pattern

DOWNLOAD drawings at EXAIR.com

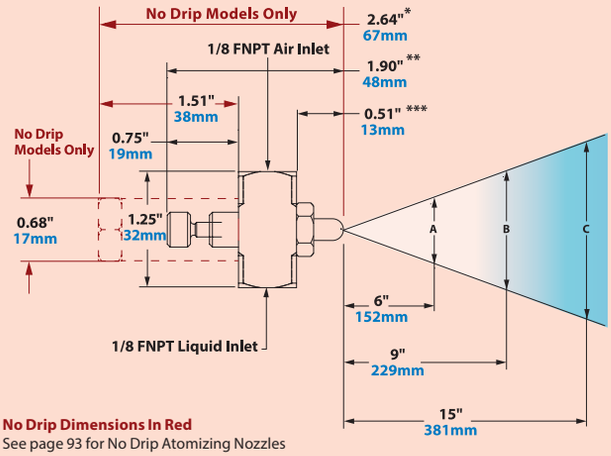


**No Drip Dimensions In Red**
See page 93 for No Drip Atomizing Nozzles

* Model SF8010SS 2.48" / 63mm
** Model SF8010SS 1.74" / 44mm
***Model SF8010SS 0.36" / 9mm

**Liquid Flow in GPH/LPH**

| Model | Air Pressure PSI/BAR | | Air SCFM/SLPM | | Gravity Head 18" | 46cm | 12" | 30cm | 6" | 15cm | Siphon Height 4" | 10cm | 8" | 20cm | 12" | 30cm | 24" | 61cm | 36" | 91cm |
|---|---|---|---|---|---|---|---|---|---|---|---|---|---|---|---|---|---|---|---|---|
| SF8010SS | 10 | 0.7 | 1.07 | 30.3 | 0.32 | 1.2 | 0.30 | 1.1 | 0.25 | 1.0 | 0.24 | 0.9 | 0.23 | 0.9 | 0.18 | 0.7 | 0.17 | 0.7 | 0.14 | 0.5 |
| | 20 | 1.4 | 1.31 | 37.1 | 0.36 | 1.4 | 0.35 | 1.3 | 0.31 | 1.2 | 0.31 | 1.2 | 0.30 | 1.1 | 0.25 | 0.9 | 0.23 | 0.9 | 0.19 | 0.7 |
| | 60 | 4.1 | 1.69 | 47.9 | 0.43 | 1.6 | 0.40 | 1.5 | 0.35 | 1.3 | 0.34 | 1.3 | 0.32 | 1.2 | 0.27 | 1.0 | 0.26 | 1.0 | 0.24 | 0.9 |
| SF8020SS | 20 | 1.4 | 1.81 | 51.3 | 1.52 | 5.8 | 1.33 | 5.0 | 1.10 | 4.2 | 0.80 | 0.9 | 0.76 | 2.9 | 0.71 | 2.7 | 0.50 | 1.9 | 0.36 | 1.4 |
| | 30 | 2.1 | 2.30 | 65.1 | 1.18 | 4.5 | 1.16 | 4.4 | 1.06 | 4.0 | 0.85 | 3.2 | 0.79 | 3.0 | 0.77 | 2.9 | 0.52 | 2.0 | 0.44 | 1.7 |
| | 40 | 2.8 | 2.83 | 80.2 | 1.01 | 3.8 | 0.90 | 3.4 | 0.83 | 3.1 | 0.70 | 2.6 | 0.67 | 2.5 | 0.63 | 2.4 | 0.42 | 1.6 | 0.27 | 1.0 |
| | 50 | 3.4 | 3.34 | 94.6 | 0.85 | 3.2 | 0.71 | 2.7 | 0.59 | 2.2 | 0.48 | 1.8 | 0.41 | 1.6 | 0.51 | 1.9 | 0.32 | 1.2 | — | — |
| SF8030SS | 20 | 1.4 | 1.78 | 50.3 | 1.45 | 5.5 | 1.40 | 5.3 | 1.38 | 5.2 | 0.94 | 3.6 | 0.90 | 3.4 | 0.77 | 2.9 | 0.72 | 2.7 | 0.61 | 2.3 |
| | 30 | 2.1 | 2.24 | 63.5 | 1.16 | 4.4 | 1.12 | 4.2 | 1.10 | 4.2 | 1.00 | 3.8 | 0.98 | 3.7 | 0.86 | 3.2 | 0.81 | 3.1 | 0.69 | 2.6 |
| | 40 | 2.8 | 2.75 | 77.8 | 0.98 | 3.7 | 0.96 | 3.6 | 0.85 | 3.2 | 0.90 | 3.4 | 0.87 | 3.3 | 0.79 | 3.0 | 0.66 | 2.5 | 0.52 | 2.0 |
| | 50 | 3.4 | 3.00 | 85.0 | 0.83 | 3.2 | 0.79 | 3.0 | 0.70 | 2.6 | 0.75 | 2.8 | 0.69 | 2.6 | 0.66 | 2.5 | 0.51 | 1.9 | 0.44 | 1.7 |

**Spray Dimensions at 8" (20cm) Siphon Height**

| Model | Air Pressure PSI/BAR | | Width A in | A cm | B in | B cm | C in | C cm | Max. Depth feet/m | |
|---|---|---|---|---|---|---|---|---|---|---|
| SF8010SS | 10 | 0.7 | 7 | 18 | 9 | 23 | 12 | 30 | 2 | 0.6 |
| | 20 | 1.4 | 7 | 18 | 9 | 23 | 12 | 30 | 2 | 0.6 |
| | 30 | 2.1 | 7 | 18 | 9 | 23 | 12 | 30 | 2 | 0.6 |
| SF8020SS | 20 | 1.4 | 8 | 20 | 9 | 23 | 12 | 30 | 2 | 0.6 |
| | 30 | 2.1 | 9 | 23 | 11 | 28 | 13 | 33 | 2 | 0.6 |
| | 40 | 2.8 | 9 | 23 | 10 | 25 | 13 | 33 | 2 | 0.6 |
| | 50 | 3.4 | 7 | 18 | 8 | 20 | 9 | 23 | 3 | 0.9 |
| SF8030SS | 20 | 1.4 | 7 | 18 | 8 | 20 | 9.5 | 24 | 2 | 0.6 |
| | 30 | 2.1 | 7 | 18 | 8 | 20 | 9.5 | 24 | 2 | 0.6 |
| | 40 | 2.8 | 7 | 18 | 8 | 20 | 9.5 | 24 | 3 | 0.9 |
| | 50 | 3.4 | 7 | 18 | 8 | 20 | 9.5 | 24 | 3 | 0.9 |

An INTELLIGENT COMPRESSED AIR® Product

KING awards 2011 WINNER

Plant Engineering PRODUCT of the YEAR Finalist 2011

## Internal Mix Narrow Angle Round Pattern - 1/4 NPT

**Model: AN1010SS**
**Material:** Type 303 Stainless Steel

**Model: AN1020SS**
**Material:** Type 303 Stainless Steel

**Model: AN1030SS**
**Material:** Type 303 Stainless Steel

**Model: AN1040SS**
**Material:** Type 303 Stainless Steel

### Model AN1010SS, AN1020SS, AN1030SS, and AN1040SS

1/4 NPT internal mix narrow angle round pattern nozzles are excellent for spraying a concentrated mist of liquid. Because of the versatility of their adjustments, they can apply a heavy coat up close or send a very fine mist over 30 feet away! They are often used for precision application of lubricants during assembly, or marking items as they move through an assembly line. Narrow angle round pattern atomizing nozzles are capable of delivering the most liquid of any of our 1/4 NPT internal mix atomizing nozzles.

**For pressure fed applications not requiring independent air and liquid control.**

**The amount of liquid applied can be greatly varied by adjusting the valve or inlet pressures.**

## Dimensions and Airflow Pattern

DOWNLOAD drawings at EXAIR.com

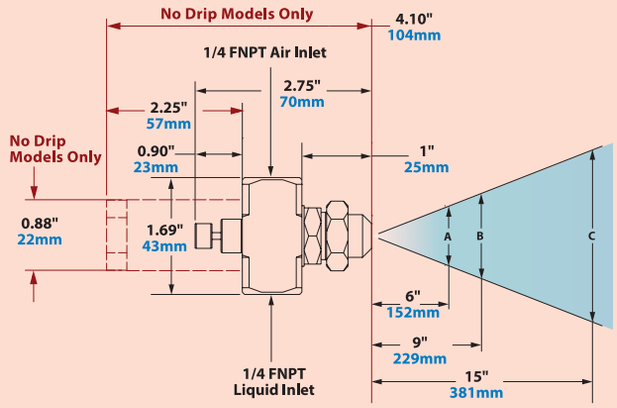


**No Drip Only Dimensions in Red**
See page 93 for No Drip Atomizing Nozzles

| Model | 10 PSI/0.7 BAR Liquid | | | | | | 20 PSI/1.4 BAR Liquid | | | | | | 30 PSI/2.1 BAR Liquid | | | | | | 40 PSI/2.8 BAR Liquid | | | | | | 60 PSI/4.1 BAR Liquid | | | | | |
|---|---|---|---|---|---|---|---|---|---|---|---|---|---|---|---|---|---|---|---|---|---|---|---|---|---|---|---|---|---|---|
| | Air Pressure PSI/BAR | | GPH/ LPH | | SCFM/ SLPM | | Air Pressure PSI/BAR | | GPH/ LPH | | SCFM/ SLPM | | Air Pressure PSI/BAR | | GPH/ LPH | | SCFM/ SLPM | | Air Pressure PSI/BAR | | GPH/ LPH | | SCFM/ SLPM | | Air Pressure PSI/BAR | | GPH/ LPH | | SCFM/ SLPM | |
| AN1010SS | 10 | 0.7 | 1.4 | 5.3 | 0.6 | 17 | 18 | 1.2 | 1.8 | 6.8 | 0.9 | 25 | 24 | 1.7 | 2.3 | 8.7 | 1.0 | 28 | 30 | 2.1 | 2.7 | 10.2 | 1.2 | 34 | 40 | 2.8 | 3.3 | 12.5 | 1.5 | 42 |
| | 12 | 0.8 | 1.2 | 4.5 | 0.7 | 20 | 22 | 1.5 | 1.6 | 6.1 | 1.0 | 28 | 32 | 2.2 | 1.9 | 7.2 | 1.3 | 37 | 38 | 2.6 | 2.3 | 8.7 | 1.5 | 42 | 52 | 3.6 | 2.8 | 10.6 | 1.9 | 54 |
| | 14 | 1.0 | 1.1 | 4.2 | 0.8 | 23 | 24 | 1.7 | 1.5 | 5.7 | 1.1 | 31 | 36 | 2.5 | 1.6 | 6.1 | 1.5 | 42 | 44 | 3.0 | 1.9 | 7.2 | 1.7 | 48 | 62 | 4.3 | 2.3 | 8.7 | 2.4 | 68 |
| | --- | --- | --- | --- | --- | --- | 26 | 1.8 | 1.3 | 4.9 | 1.2 | 34 | 40 | 2.8 | 1.3 | 4.9 | 1.7 | 48 | 48 | 3.3 | 1.7 | 6.4 | 2.0 | 57 | 70 | 4.8 | 1.9 | 7.2 | 2.8 | 79 |
| AN1020SS | 16 | 1.1 | 3.7 | 14.0 | 2.8 | 79 | 28 | 1.9 | 5.2 | 19.7 | 4.0 | 113 | 40 | 2.8 | 6.0 | 22.7 | 5.2 | 147 | 48 | 3.3 | 7.0 | 26.5 | 5.9 | 167 | 65 | 4.5 | 9.9 | 37.5 | 7.0 | 198 |
| | 20 | 1.4 | 2.5 | 9.5 | 3.4 | 96 | 36 | 2.5 | 2.7 | 10.2 | 5.1 | 144 | 48 | 3.3 | 3.8 | 14.4 | 6.4 | 181 | 65 | 4.5 | 3.6 | 13.6 | 8.1 | 229 | 80 | 5.5 | 6.6 | 25.0 | 8.6 | 244 |
| | 24 | 1.7 | 1.4 | 5.3 | 4.0 | 113 | 40 | 2.8 | 1.7 | 6.4 | 5.7 | 161 | 55 | 3.8 | 2.1 | 7.9 | 7.3 | 207 | 75 | 5.2 | 1.4 | 5.3 | 9.8 | 277 | 90 | 6.2 | 4.5 | 17.0 | 10.1 | 286 |
| | 28 | 1.9 | 0.6 | 2.3 | 4.6 | 130 | 44 | 3.0 | 0.8 | 3.0 | 6.4 | 181 | 60 | 4.1 | 1.1 | 4.2 | 8.1 | 229 | 80 | 5.5 | 0.8 | 3.0 | 10.2 | 289 | 100 | 6.9 | 2.4 | 9.1 | 11.3 | 320 |
| AN1030SS | 12 | 0.8 | 7.8 | 29.5 | 1.9 | 54 | 20 | 1.4 | 12.9 | 48.8 | 2.5 | 71 | 30 | 2.1 | 15.1 | 57.2 | 3.4 | 96 | 38 | 2.6 | 18.0 | 68.1 | 4.1 | 116 | 54 | 3.7 | 23.0 | 87.1 | 5.3 | 150 |
| | 14 | 1.0 | 6.0 | 22.7 | 2.2 | 62 | 24 | 1.7 | 9.8 | 37.1 | 3.0 | 85 | 38 | 2.6 | 9.4 | 35.6 | 4.5 | 127 | 46 | 3.2 | 13.1 | 49.6 | 5.1 | 144 | 65 | 4.5 | 17.1 | 64.7 | 6.7 | 190 |
| | 16 | 1.1 | 4.4 | 16.7 | 2.6 | 74 | 28 | 1.9 | 7.0 | 26.5 | 3.6 | 102 | 42 | 2.9 | 7.0 | 26.5 | 5.1 | 144 | 52 | 3.6 | 9.6 | 36.3 | 6.0 | 170 | 75 | 5.2 | 12.3 | 46.6 | 8.0 | 227 |
| | 18 | 1.2 | 3.3 | 12.5 | 2.9 | 82 | 32 | 2.2 | 4.1 | 15.5 | 4.4 | 125 | 46 | 3.2 | 5.0 | 18.9 | 5.9 | 167 | 56 | 3.9 | 7.3 | 27.6 | 6.6 | 187 | 85 | 5.9 | 7.3 | 27.6 | 9.6 | 272 |
| AN1040SS | 14 | 1.0 | 6.3 | 23.8 | 3.5 | 99 | 20 | 1.4 | 24.0 | 90.8 | 3.0 | 85 | 28 | 1.9 | 33.0 | 125 | 3.4 | 96 | 32 | 2.2 | 46.5 | 176 | 2.8 | 79 | 42 | 2.9 | 66.0 | 250 | 2.7 | 76 |
| | 16 | 1.1 | 3.0 | 11.4 | 4.2 | 119 | 24 | 1.7 | 13.0 | 49.2 | 4.2 | 119 | 32 | 2.2 | 24.0 | 90.8 | 4.6 | 130 | 40 | 2.8 | 30.0 | 114 | 5.1 | 144 | 50 | 3.4 | 54.0 | 204 | 4.3 | 122 |
| | --- | --- | --- | --- | --- | --- | 26 | 1.8 | 9.0 | 34.1 | 4.9 | 139 | 36 | 2.5 | 12.5 | 47.3 | 5.9 | 167 | 46 | 3.2 | 16.5 | 62.5 | 6.8 | 193 | 58 | 4.0 | 39.0 | 148 | 6.6 | 187 |
| | --- | --- | --- | --- | --- | --- | 28 | 1.9 | 5.5 | 20.8 | 5.6 | 159 | 40 | 2.8 | 6.0 | 22.7 | 7.4 | 210 | 50 | 3.4 | 10.3 | 39.0 | 8.2 | 232 | 70 | 4.8 | 15.8 | 60 | 10.2 | 289 |

| Spray Dimensions | | | | | | | | | | | | | |
|---|---|---|---|---|---|---|---|---|---|---|---|---|---|
| Pressure | | | | Width | | | | | | | | Max. Depth feet/m | |
| Air PSI/ BAR | | Liquid PSI/BAR | | A | | B | | C | | | | | |
| | | | | in | cm | in | cm | in | cm | | | | |
| 12 | 0.8 | 10 | 0.7 | 2.3 | 6 | 3.3 | 8 | 5.0 | 13 | 6 | 1.8 | AN1010SS |
| 20 | 1.4 | 20 | 1.4 | 2.8 | 7 | 3.8 | 10 | 6.0 | 15 | 8 | 2.4 | |
| 34 | 2.3 | 30 | 2.1 | 3.0 | 8 | 4.3 | 11 | 6.5 | 17 | 9 | 2.7 | |
| 42 | 2.9 | 40 | 2.8 | 3.5 | 9 | 4.5 | 11 | 6.5 | 17 | 10 | 3.0 | |
| 58 | 4.0 | 60 | 4.1 | 4.0 | 10 | 5.0 | 13 | 7.0 | 18 | 11 | 3.4 | |
| 24 | 1.7 | 10 | 0.7 | 2.5 | 6 | 3.5 | 9 | 5.5 | 14 | 11 | 3.4 | AN1020SS |
| 38 | 2.6 | 20 | 1.4 | 2.8 | 7 | 4.0 | 10 | 6.5 | 17 | 12 | 3.7 | |
| 55 | 3.8 | 30 | 2.1 | 3.0 | 8 | 4.5 | 11 | 6.5 | 17 | 13 | 4.0 | |
| 65 | 4.5 | 40 | 2.8 | 3.5 | 9 | 5.0 | 13 | 7.0 | 18 | 14 | 4.3 | |
| 85 | 5.9 | 60 | 4.1 | 4.0 | 10 | 5.5 | 14 | 7.5 | 19 | 18 | 5.5 | |
| 14 | 1.0 | 10 | 0.7 | 2.8 | 7 | 4.5 | 11 | 6.5 | 17 | 10 | 3.0 | AN1030SS |
| 26 | 1.8 | 20 | 1.4 | 3.3 | 8 | 5.0 | 13 | 7.0 | 18 | 16 | 4.9 | |
| 40 | 2.8 | 30 | 2.1 | 3.8 | 10 | 5.5 | 14 | 7.0 | 18 | 19 | 5.8 | |
| 50 | 3.4 | 40 | 2.8 | 4.0 | 10 | 6.0 | 15 | 8.0 | 20 | 22 | 6.7 | |
| 70 | 4.8 | 60 | 4.1 | 4.0 | 10 | 6.0 | 15 | 8.0 | 20 | 26 | 7.9 | |
| 14 | 1.0 | 10 | 0.7 | 3.0 | 8 | 4.5 | 11 | 6.5 | 17 | 17 | 5.2 | AN1040SS |
| 24 | 1.7 | 20 | 1.4 | 3.5 | 9 | 6.0 | 15 | 7.5 | 19 | 21 | 6.4 | |
| 34 | 2.3 | 30 | 2.1 | 4.0 | 10 | 6.5 | 17 | 8.0 | 20 | 26 | 7.9 | |
| 44 | 3.0 | 40 | 2.8 | 4.5 | 11 | 7.0 | 18 | 8.5 | 22 | 30 | 9.1 | |
| 64 | 4.4 | 60 | 4.1 | 5.0 | 13 | 7.0 | 18 | 9.0 | 23 | 35 | 10.7 | |

# Air Atomizing Spray Nozzles

## Internal Mix Wide Angle Round Pattern - 1/4 NPT

KING awards 2011 WINNER

Plant Engineering PRODUCT of the YEAR Finalist 2011

**Model: AW1010SS**
**Material:** Type 303 Stainless Steel

**Model: AW1020SS**
**Material:** Type 303 Stainless Steel

**Model: AW1030SS**
**Material:** Type 303 Stainless Steel

**Model: AW1040SS**
**Material:** Type 303 Stainless Steel

### Model AW1010SS, AW1020SS, AW1030SS, and AW1040SS

EXAIR's 1/4 NPT internal mix wide angle round pattern atomizing nozzles are great for covering a broad area. They can be adjusted for a light mist or a heavy soaking spray. They are popular for dust mitigation, humidification, and cooling of products, people or livestock in a broad area. These nozzles are also perfect for applying a coating to parts packed in large containers, for example, misting a container of stamped steel parts with oil to prevent oxidation during shipment.

**For pressure fed applications not requiring independent air and liquid control.**



**A Model AW1030SS is used to keep dust down during charcoal briquette production.**

## Dimensions and Airflow Pattern

DOWNLOAD drawings at EXAIR.com

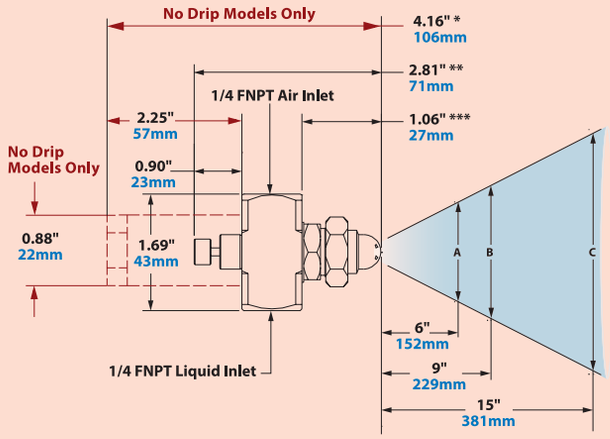


*Model AW2010SS: 4.03" / 102mm
**Model AW1010SS: 2.68" / 68mm
***Model AW1010SS: 0.93" / 24mm

**No Drip Only Dimensions in Red**
See page 93 for No Drip Atomizing Nozzles

| Model | 10 PSI/0.7 BAR Liquid | | | | | | 20 PSI/1.4 BAR Liquid | | | | | | 30 PSI/2.1 BAR Liquid | | | | | | 40 PSI/2.8 BAR Liquid | | | | | | 60 PSI/4.1 BAR Liquid | | | | | |
|---|---|---|---|---|---|---|---|---|---|---|---|---|---|---|---|---|---|---|---|---|---|---|---|---|---|---|---|---|---|---|
| | Air Pressure PSI/BAR | | GPH/ LPH | | SCFM/ SLPM | | Air Pressure PSI/BAR | | GPH/ LPH | | SCFM/ SLPM | | Air Pressure PSI/BAR | | GPH/ LPH | | SCFM/ SLPM | | Air Pressure PSI/BAR | | GPH/ LPH | | SCFM/ SLPM | | Air Pressure PSI/BAR | | GPH/ LPH | | SCFM/ SLPM | |
| AW1010SS | 8 | 0.6 | 1.8 | 6.8 | 0.3 | 8 | 14 | 1.0 | 2.4 | 9.1 | 0.4 | 11 | 22 | .5 | 2.7 | 10.2 | 0.5 | 14 | 30 | 2.1 | 3.0 | 11.4 | 0.7 | 20 | 44 | 3.0 | 3.5 | 13.2 | 0.9 | 25 |
| | 10 | 0.7 | 1.6 | 6.1 | 0.4 | 11 | 18 | 1.2 | 2.1 | 7.9 | 0.5 | 14 | 30 | 2.1 | 2.3 | 8.7 | 0.7 | 20 | 38 | 2.6 | 2.6 | 9.8 | 0.8 | 23 | 55 | 3.8 | 3.1 | 11.7 | 1.1 | 31 |
| | 12 | 0.8 | 1.5 | 5.7 | 0.4 | 11 | 22 | 1.5 | 1.9 | 7.2 | 0.6 | 17 | 36 | 2.5 | 1.9 | 7.2 | 0.8 | 23 | 46 | 3.2 | 2.1 | 7.9 | 1.0 | 28 | 65 | 4.5 | 2.5 | 9.5 | 1.3 | 37 |
| | 14 | 1.0 | 1.3 | 4.9 | 0.5 | 14 | 26 | 1.8 | 1.6 | 6.1 | 0.7 | 20 | 40 | 2.8 | 1.6 | 6.1 | 0.9 | 25 | 50 | 3.4 | 1.9 | 7.2 | 1.1 | 31 | 75 | 5.2 | 2.1 | 7.9 | 1.5 | 42 |
| AW1020SS | 12 | 0.8 | 2.8 | 10.6 | 1.7 | 48 | 22 | 1.5 | 4.0 | 15.1 | 2.3 | 65 | 30 | 2.1 | 5.4 | 20.4 | 2.5 | 71 | 38 | 2.6 | 6.4 | 24.2 | 2.9 | 82 | 54 | 3.7 | 8.5 | 32.2 | 3.5 | 99 |
| | 14 | 1.0 | 1.6 | 6.1 | 2.0 | 57 | 24 | 1.7 | 3.1 | 11.7 | 2.5 | 71 | 34 | 2.3 | 3.8 | 14.4 | 3.2 | 91 | 44 | 3.0 | 4.4 | 16.7 | 3.9 | 110 | 58 | 4.0 | 7.0 | 26.5 | 4.1 | 116 |
| | --- | --- | --- | --- | --- | --- | 6 | 1.8 | 2.0 | 7.6 | 2.9 | 82 | 38 | 2.6 | 1.8 | 6.8 | 4.0 | 113 | 48 | 3.3 | 2.6 | 9.8 | 4.6 | 130 | 65 | 4.5 | 5.4 | 20.4 | 5.2 | 147 |
| | --- | --- | --- | --- | --- | --- | --- | --- | --- | --- | --- | --- | 40 | 2.8 | 0.9 | 3.4 | 4.5 | 127 | 52 | 3.6 | 1.0 | 3.8 | 5.4 | 153 | 75 | 5.2 | 1.7 | 6.4 | 7.1 | 201 |
| AW1030SS | 10 | 0.7 | 6.8 | 25.7 | 1.1 | 31 | 20 | 1.4 | 8.5 | 32.2 | 1.5 | 42 | 30 | 2.1 | 9.0 | 34.1 | 2.0 | 57 | 40 | 2.8 | 10.0 | 37.9 | 2.6 | 74 | 56 | 3.9 | 15.0 | 56.8 | 2.9 | 82 |
| | 12 | 0.8 | 4.5 | 17.0 | 1.4 | 40 | 22 | 1.5 | 6.0 | 22.7 | 1.9 | 54 | 34 | 2.3 | 5.8 | 22.0 | 2.8 | 79 | 44 | 3.0 | 7.0 | 26.5 | 3.4 | 96 | 60 | 4.1 | 12.0 | 45.4 | 3.5 | 99 |
| | 14 | 1.0 | 2.2 | 8.3 | 1.9 | 54 | 24 | 1.7 | 4.5 | 17.0 | 2.3 | 65 | 38 | 2.6 | 2.4 | 9.1 | 3.8 | 108 | 48 | 3.3 | 3.7 | 14.0 | 4.2 | 119 | 70 | 4.8 | 5.0 | 18.9 | 5.6 | 159 |
| | --- | --- | --- | --- | --- | --- | 26 | 1.8 | 2.6 | 9.8 | 2.7 | 76 | 40 | 2.8 | 1.4 | 5.3 | 4.3 | 122 | 52 | 3.6 | 1.5 | 5.7 | 5.2 | 147 | 80 | 5.5 | 0.8 | 3.0 | 7.7 | 218 |
| AW1040SS | 24 | 1.7 | 6.0 | 22.7 | 5.4 | 153 | 38 | 2.6 | 9.3 | 35.2 | 7.7 | 218 | 48 | 3.3 | 15.5 | 58.7 | 8.4 | 238 | 60 | 4.1 | 19.3 | 73.1 | 10.3 | 292 | 85 | 5.9 | 4.0 | 91.0 | 13.8 | 391 |
| | 28 | 1.9 | 4.0 | 15.1 | 6.1 | 190 | 44 | 3.0 | 3.5 | 13.2 | 10.0 | 283 | 56 | 3.9 | 9.0 | 34.1 | 10.6 | 300 | 70 | 4.8 | 12.0 | 45.4 | 12.8 | 362 | 95 | 6.6 | 18.5 | 70.0 | 16.5 | 467 |
| | 30 | 2.1 | 2.5 | 9.5 | 6.7 | 190 | 48 | 3.3 | 3.5 | 13.2 | 10.0 | 283 | 62 | 4.3 | 6.0 | 22.7 | 12.1 | 343 | 80 | 5.5 | 6.5 | 24.6 | 14.7 | 416 | 95 | 6.6 | 18.5 | 70.0 | 16.5 | 467 |
| | 32 | 2.2 | 2.0 | 7.6 | 7.3 | 207 | 52 | 3.6 | 1.9 | 7.2 | 10.8 | 306 | 90 | 6.2 | 2.8 | 10.6 | 17.2 | 487 | 100 | 6.9 | 15.8 | 59.8 | 17.3 | 490 | 100 | 6.9 | 15.8 | 59.8 | 17.3 | 490 |

| Spray Dimensions | | | | | | | | | | | | | | |
|---|---|---|---|---|---|---|---|---|---|---|---|---|---|---|
| Pressure | | | | Width | | | | | | | | Max. Depth feet/m | | |
| Air PSI/ BAR | | Liquid PSI/BAR | | A | | B | | C | | | | | | |
| | | | | in | cm | in | cm | in | cm | | | | | |
| 10 | 0.7 | 10 | 0.7 | 7 | 18 | 9 | 23 | 14 | 36 | 5 | 1.5 | AW1010SS |
| 20 | 1.4 | 20 | 1.4 | 9 | 23 | 11 | 28 | 15 | 38 | 6 | 1.8 | |
| 34 | 2.3 | 30 | 2.1 | 10 | 25 | 12 | 30 | 16 | 41 | 8 | 2.4 | |
| 42 | 2.9 | 40 | 2.8 | 10 | 25 | 12 | 30 | 16 | 41 | 9 | 2.7 | |
| 60 | 4.1 | 60 | 4.1 | 10 | 25 | 12 | 30 | 16 | 41 | 12 | 3.7 | |
| 12 | 0.8 | 10 | 0.7 | 10 | 25 | 13 | 33 | 17 | 43 | 9 | 2.7 | AW1020SS |
| 24 | 1.7 | 20 | 1.4 | 11 | 28 | 13 | 33 | 18 | 46 | 11 | 3.4 | |
| 34 | 2.3 | 30 | 2.1 | 11 | 28 | 13 | 33 | 18 | 46 | 12 | 3.7 | |
| 46 | 3.2 | 40 | 2.8 | 11 | 28 | 14 | 36 | 18 | 46 | 14 | 4.3 | |
| 60 | 4.1 | 60 | 4.1 | 11 | 28 | 14 | 36 | 19 | 48 | 16 | 4.9 | |
| 12 | 0.8 | 10 | 0.7 | 10 | 25 | 13 | 33 | 18 | 46 | 9 | 2.7 | AW1030SS |
| 22 | 1.5 | 20 | 1.4 | 11 | 28 | 13 | 33 | 18 | 46 | 11 | 3.4 | |
| 34 | 2.3 | 30 | 2.1 | 11 | 28 | 14 | 36 | 18 | 46 | 13 | 4.0 | |
| 46 | 3.2 | 40 | 2.8 | 11 | 28 | 14 | 36 | 19 | 48 | 15 | 4.6 | |
| 65 | 4.5 | 60 | 4.1 | 11 | 28 | 14 | 36 | 20 | 51 | 19 | 5.8 | |
| 28 | 1.9 | 10 | 0.7 | 10 | 25 | 14 | 36 | 16 | 41 | 16 | 4.9 | AW1040SS |
| 46 | 3.2 | 20 | 1.4 | 11 | 28 | 14 | 36 | 18 | 46 | 18 | 5.5 | |
| 60 | 4.1 | 30 | 2.1 | 12 | 30 | 16 | 41 | 21 | 53 | 21 | 6.4 | |
| 75 | 5.2 | 40 | 2.8 | 12 | 30 | 16 | 41 | 22 | 56 | 24 | 7.3 | |
| 90 | 6.2 | 60 | 4.1 | 12 | 30 | 16 | 41 | 23 | 58 | 25 | 7.6 | |


For Technical Assistance, Call an EXAIR Application Engineer 1-800-903-9247
Toll Free FAX (866) 329-3924 • E-mail: techelp@exair.com • www.exair.com

An INTELLIGENT COMPRESSED AIR® Product

KING awards 2011 WINNER

Plant Engineering PRODUCT of the YEAR Finalist 2011

## Internal Mix Flat Fan Pattern - 1/4 NPT

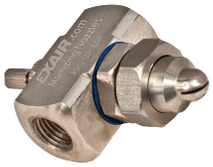

**Model: AF1010SS**
**Material:** Type 303 Stainless Steel

**Model: AF1020SS**
**Material:** Type 303 Stainless Steel

**Model: AF1030SS**
**Material:** Type 303 Stainless Steel

**Model: AF1040SS**
**Material:** Type 303 Stainless Steel

**Model: AF1050SS**
**Material:** Type 303 Stainless Steel

### Model AF1010SS, AF1020SS, AF1030SS, AF1040SS, and AF1050SS

1/4 NPT internal mix flat fan pattern atomizing nozzles are designed with efficiency in mind. Especially good for vertical or horizontal assembly lines, their broad thin pattern makes efficient use of your expensive liquids. Their output can be adjusted for a very light film or a heavy coat of whatever liquid you're working with. Whether it's applying paint to hanging sheet metal, or using a water mist to cool a laminate web, flat fan atomizing nozzles cover a wide flat area, ideal for products moving on a conveyor.

**For pressure fed applications not requiring independent air and liquid control.**

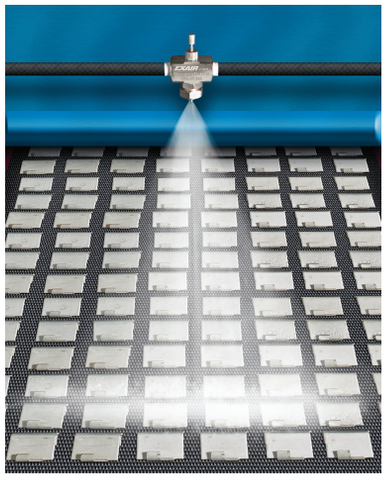

**A Model AF1030SS is used to spray an anti-corrosion coating on stamped steel parts as they travel on a conveyor.**

## Dimensions and Airflow Pattern

DOWNLOAD drawings at EXAIR.com

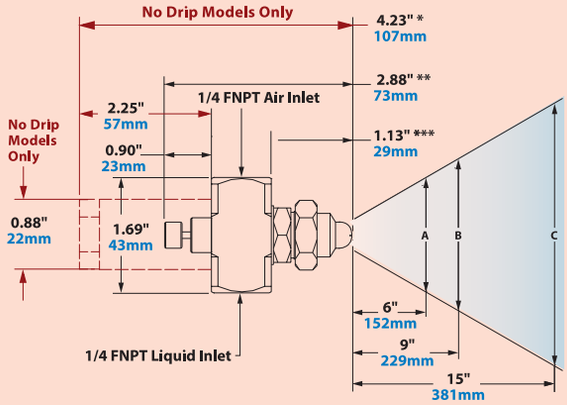


*Model AF2010SS & AF2020SS: 4.10" / 104mm
**Model AF1010SS & AF1020SS: 2.75" / 70mm
***Model AF1010SS & AF1020SS: 1" / 25mm

**No Drip Only Dimensions in Red**
See page 93 for No Drip Atomizing Nozzles

| Model | 10 PSI/0.7 BAR Liquid | | | | | | 20 PSI/1.4 BAR Liquid | | | | | | 30 PSI/2.1 BAR Liquid | | | | | | 40 PSI/2.8 BAR Liquid | | | | | | 60 PSI/4.1 BAR Liquid | | | | | |
|---|---|---|---|---|---|---|---|---|---|---|---|---|---|---|---|---|---|---|---|---|---|---|---|---|---|---|---|---|---|---|
| | Air Pressure PSI/BAR | | GPH/ LPH | | SCFM/ SLPM | | Air Pressure PSI/BAR | | GPH/ LPH | | SCFM/ SLPM | | Air Pressure PSI/BAR | | GPH/ LPH | | SCFM/ SLPM | | Air Pressure PSI/BAR | | GPH/ LPH | | SCFM/ SLPM | | Air Pressure PSI/BAR | | GPH/ LPH | | SCFM/ SLPM | |
| AF1010SS | 10 | 0.7 | 1.6 | 6.1 | 0.7 | 20 | 18 | 1.2 | 2.1 | 7.9 | 1.0 | 28 | 28 | 1.9 | 2.4 | 9.1 | 1.4 | 40 | 38 | 2.6 | 2.6 | 9.8 | 1.7 | 48 | 55 | 3.8 | 3.2 | 12.1 | 2.2 | 62 |
| | 14 | 1.0 | 1.4 | 5.3 | 0.9 | 25 | 26 | 1.8 | 1.7 | 6.4 | 1.3 | 37 | 40 | 2.8 | 1.8 | 6.8 | 1.8 | 51 | 50 | 3.4 | 2.0 | 7.6 | 2.1 | 59 | 75 | 5.2 | 2.3 | 8.7 | 3.0 | 85 |
| | 18 | 1.2 | 1.1 | 4.2 | 1.1 | 31 | 34 | 2.3 | 1.2 | 4.5 | 1.7 | 48 | 48 | 3.3 | 1.4 | 5.3 | 2.1 | 59 | 60 | 4.1 | 1.6 | 6.1 | 2.5 | 71 | 90 | 6.2 | 1.6 | 6.1 | 3.6 | 102 |
| | 22 | 1.5 | 0.8 | 3.0 | 1.3 | 37 | 40 | 2.8 | 0.8 | 3.0 | 1.9 | 54 | 55 | 3.8 | 1.0 | 3.8 | 2.4 | 68 | 70 | 4.8 | 1.2 | 4.5 | 3.0 | 85 | 100 | 6.9 | 1.3 | 4.9 | 4.1 | 116 |
| AF1020SS | 12 | 0.8 | 2.4 | 9.1 | 0.7 | 20 | 20 | 1.4 | 3.4 | 12.9 | 0.9 | 25 | 30 | 2.1 | 3.9 | 14.8 | 1.2 | 34 | 38 | 2.6 | 4.6 | 17.4 | 1.4 | 40 | 65 | 4.5 | 4.7 | 17.8 | 2.2 | 62 |
| | 16 | 1.1 | 1.8 | 6.8 | 0.9 | 25 | 28 | 1.9 | 2.4 | 9.1 | 1.2 | 34 | 38 | 2.6 | 2.9 | 11.0 | 1.5 | 42 | 50 | 3.4 | 3.2 | 12.1 | 1.9 | 54 | 75 | 5.2 | 3.7 | 14.0 | 2.6 | 74 |
| | 18 | 1.2 | 1.5 | 5.7 | 1.0 | 28 | 32 | 2.2 | 1.8 | 6.8 | 1.5 | 42 | 46 | 3.2 | 2.0 | 7.6 | 1.9 | 54 | 60 | 4.1 | 2.2 | 8.3 | 2.3 | 65 | 85 | 5.9 | 2.8 | 10.6 | 3.0 | 85 |
| | 20 | 1.4 | 1.3 | 4.9 | 1.1 | 31 | 36 | 2.5 | 1.4 | 5.3 | 1.7 | 48 | 50 | 3.4 | 1.6 | 6.1 | 2.1 | 59 | 70 | 4.8 | 1.4 | 5.3 | 2.8 | 79 | 95 | 6.6 | 2.1 | 7.9 | 3.6 | 102 |
| AF1030SS | 16 | 1.1 | 4.5 | 17.0 | 2.0 | 57 | 28 | 1.9 | 6.0 | 22.7 | 2.8 | 79 | 38 | 2.6 | 7.0 | 26.5 | 3.5 | 99 | 46 | 3.2 | 8.5 | 32.2 | 4.0 | 113 | 65 | 4.5 | 11.0 | 41.6 | 5.3 | 150 |
| | 20 | 1.4 | 3.3 | 12.5 | 2.4 | 68 | 32 | 2.2 | 5.0 | 18.9 | 3.1 | 88 | 42 | 2.9 | 6.4 | 24.2 | 3.8 | 108 | 52 | 3.6 | 7.5 | 28.4 | 4.5 | 127 | 70 | 4.8 | 10.0 | 37.9 | 5.7 | 161 |
| | 24 | 1.7 | 2.4 | 9.1 | 2.7 | 76 | 34 | 2.3 | 4.5 | 17.0 | 3.3 | 93 | 46 | 3.2 | 5.5 | 20.8 | 4.1 | 116 | 58 | 4.0 | 6.3 | 23.8 | 4.9 | 139 | 80 | 5.5 | 8.0 | 30.3 | 6.4 | 181 |
| | 28 | 1.9 | 1.5 | 5.7 | 3.1 | 88 | 36 | 2.5 | 3.9 | 14.8 | 3.5 | 99 | 48 | 3.3 | 5.1 | 19.3 | 4.4 | 125 | 60 | 4.1 | 6.0 | 22.7 | 5.2 | 147 | 90 | 6.2 | 6.4 | 24.2 | 7.2 | 204 |
| AF1040SS | 12 | 0.8 | 8.1 | 30.7 | 1.4 | 40 | 22 | 1.5 | 12.0 | 45.4 | 1.9 | 54 | 34 | 2.3 | 13.1 | 49.6 | 2.7 | 76 | 46 | 3.2 | 14.3 | 54.1 | 3.4 | 96 | 65 | 4.5 | 18.3 | 69.3 | 4.5 | 127 |
| | 16 | 1.1 | 5.9 | 22.3 | 1.8 | 51 | 30 | 2.1 | 7.1 | 26.9 | 2.7 | 76 | 42 | 2.9 | 8.9 | 33.7 | 3.4 | 96 | 54 | 3.7 | 10.3 | 39.0 | 4.1 | 116 | 80 | 5.5 | 11.9 | 45.0 | 5.9 | 167 |
| | 18 | 1.2 | 5.0 | 18.9 | 2.0 | 57 | 34 | 2.3 | 5.6 | 21.2 | 3.1 | 88 | 48 | 3.3 | 6.3 | 23.8 | 4.1 | 116 | 60 | 4.1 | 7.9 | 29.9 | 4.8 | 136 | 90 | 6.2 | 8.5 | 32.2 | 6.8 | 193 |
| | 22 | 1.5 | 3.3 | 12.5 | 2.4 | 68 | 38 | 2.6 | 4.1 | 15.5 | 3.5 | 99 | 52 | 3.6 | 5.0 | 18.9 | 4.5 | 127 | 70 | 4.8 | 4.6 | 17.4 | 5.8 | 164 | 100 | 6.9 | 6.0 | 22.7 | 7.9 | 224 |
| AF1050SS | 14 | 1.0 | 8.8 | 33.3 | 3.0 | 85 | 26 | 1.8 | 11.5 | 43.5 | 4.3 | 122 | 34 | 2.3 | 20.8 | 78.7 | 4.6 | 130 | 42 | 2.9 | 30.0 | 114 | 4.8 | 136 | 58 | 4.0 | 42.0 | 159 | 5.5 | 156 |
| | 16 | 1.1 | 5.3 | 20.1 | 3.7 | 105 | 28 | 1.9 | 7.8 | 29.5 | 4.9 | 139 | 36 | 2.5 | 17.0 | 64.3 | 4.9 | 139 | 46 | 3.2 | 20.5 | 77.6 | 6.1 | 173 | 65 | 4.5 | 30.0 | 114 | 6.8 | 193 |
| | --- | --- | --- | --- | --- | --- | --- | --- | --- | --- | --- | --- | 40 | 2.8 | 9.0 | 34.1 | 6.1 | 173 | 50 | 3.4 | 13.5 | 51.1 | 7.3 | 207 | 70 | 4.8 | 21.0 | 79.5 | 8.7 | 246 |
| | --- | --- | --- | --- | --- | --- | --- | --- | --- | --- | --- | --- | 42 | 2.9 | 6.3 | 23.8 | 7.0 | 198 | 54 | 3.7 | 7.5 | 28.4 | 8.4 | 238 | 80 | 5.5 | 8.5 | 32.2 | 11.2 | 317 |

| Spray Dimensions | | | | | | | | | | | | | | |
|---|---|---|---|---|---|---|---|---|---|---|---|---|---|---|
| Pressure | | | | Width | | | | | | | | Max. Depth feet/m | | |
| Air PSI/ BAR | | Liquid PSI/BAR | | A | | B | | C | | | | | | |
| | | | | in | cm | in | cm | in | cm | | | | | |
| 16 | 1.1 | 10 | 0.7 | 9 | 23 | 12 | 30 | 15 | 38 | 5 | 1.5 | AF1010SS |
| 30 | 2.1 | 20 | 1.4 | 11 | 28 | 13 | 33 | 17 | 43 | 6 | 1.8 | |
| 40 | 2.8 | 30 | 2.1 | 12 | 30 | 14 | 36 | 20 | 51 | 6 | 1.8 | |
| 50 | 3.4 | 40 | 2.8 | 14 | 36 | 16 | 41 | 22 | 56 | 7 | 2.1 | |
| 85 | 5.9 | 60 | 4.1 | 14 | 36 | 17 | 43 | 23 | 58 | 7 | 2.1 | |
| 16 | 1.1 | 10 | 0.7 | 11 | 28 | 14 | 36 | 19 | 48 | 5 | 1.5 | AF1020SS |
| 30 | 2.1 | 20 | 1.4 | 14 | 36 | 17 | 43 | 21 | 53 | 6 | 1.8 | |
| 42 | 2.9 | 30 | 2.1 | 14 | 36 | 18 | 46 | 23 | 58 | 6 | 1.8 | |
| 50 | 3.4 | 40 | 2.8 | 16 | 41 | 19 | 48 | 26 | 66 | 7 | 2.1 | |
| 80 | 5.5 | 60 | 4.1 | 16 | 41 | 21 | 53 | 29 | 74 | 8 | 2.4 | |
| 20 | 1.4 | 10 | 0.7 | 11 | 28 | 14 | 36 | 19 | 48 | 10 | 3.0 | AF1030SS |
| 32 | 2.2 | 20 | 1.4 | 15 | 38 | 17 | 43 | 23 | 58 | 11 | 3.4 | |
| 42 | 2.9 | 30 | 2.1 | 16 | 41 | 21 | 53 | 29 | 74 | 12 | 3.7 | |
| 54 | 3.7 | 40 | 2.8 | 19 | 48 | 25 | 64 | 33 | 84 | 14 | 4.3 | |
| 75 | 5.2 | 60 | 4.1 | 20 | 51 | 26 | 66 | 35 | 89 | 15 | 4.6 | |
| 16 | 1.1 | 10 | 0.7 | 14 | 36 | 18 | 46 | 24 | 61 | 10 | 3.0 | AF1040SS |
| 32 | 2.2 | 20 | 1.4 | 15 | 38 | 19 | 48 | 27 | 69 | 12 | 3.7 | |
| 46 | 3.2 | 30 | 2.1 | 17 | 43 | 23 | 58 | 30 | 76 | 13 | 4.0 | |
| 56 | 3.9 | 40 | 2.8 | 20 | 51 | 25 | 64 | 34 | 86 | 15 | 4.6 | |
| 85 | 5.9 | 60 | 4.1 | 21 | 53 | 27 | 69 | 36 | 91 | 15 | 4.6 | |
| 14 | 1.0 | 10 | 0.7 | 14 | 36 | 18 | 46 | 23 | 58 | 10 | 3.0 | AF1050SS |
| 26 | 1.8 | 20 | 1.4 | 15 | 38 | 19 | 48 | 24 | 61 | 13 | 4.0 | |
| 38 | 2.6 | 30 | 2.1 | 16 | 41 | 20 | 51 | 25 | 64 | 16 | 4.9 | |
| 48 | 3.3 | 40 | 2.8 | 17 | 43 | 20 | 51 | 27 | 69 | 18 | 5.5 | |
| 70 | 4.8 | 60 | 4.1 | 17 | 43 | 21 | 53 | 29 | 74 | 19 | 5.8 | |

# Air Atomizing Spray Nozzles



## Internal Mix Deflected Flat Fan Pattern - 1/4 NPT

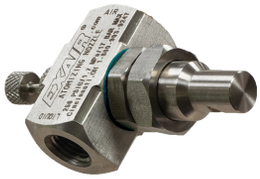

**Model: AD1010SS**
**Material:** Type 303 Stainless Steel

### Model AD1010SS

1/4 NPT internal mix deflected flat fan nozzles are designed for applications where space is at a premium. The flat fan pattern sprays at a right angle to the nozzle's orientation, allowing spray to be placed precisely where it's needed in close quarters. These nozzles are ideal for coating the inside of enclosures and ductwork.

**For pressure fed applications not requiring independent air and liquid control.**

A Model AD1010SS is used to apply a protective coating to wood panels.

### Dimensions and Airflow Pattern

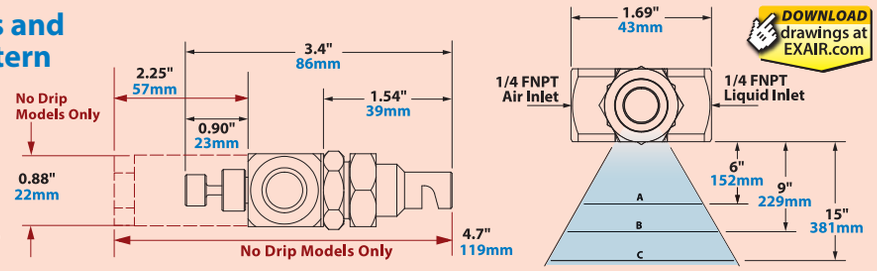


| Model | 10 PSI/0.7 BAR Liquid | | | | | | 20 PSI/1.4 BAR Liquid | | | | | | 30 PSI/2.1 BAR Liquid | | | | | | 40 PSI/2.8 BAR Liquid | | | | | | 60 PSI/4.1 BAR Liquid | | | | | | Spray Dimensions | | | | | | | | | | | |
|---|---|---|---|---|---|---|---|---|---|---|---|---|---|---|---|---|---|---|---|---|---|---|---|---|---|---|---|---|---|---|---|---|---|---|---|---|---|---|---|---|---|---|
| | Air Pressure PSI/BAR | | GPH/LPH | | SCFM/SLPM | | Air Pressure PSI/BAR | | GPH/LPH | | SCFM/SLPM | | Air Pressure PSI/BAR | | GPH/LPH | | SCFM/SLPM | | Air Pressure PSI/BAR | | GPH/LPH | | SCFM/SLPM | | Air Pressure PSI/BAR | | GPH/LPH | | SCFM/SLPM | | Pressure | | Width | | | | | | | | Max. Depth in/cm | | |
| | | | | | | | | | | | | | | | | | | | | | | | | | | | | | | | Air PSI/BAR | Liquid PSI/BAR | A | | B | | C | | | | | | | | |
| | | | | | | | | | | | | | | | | | | | | | | | | | | | | | | | | | in | cm | in | cm | in | cm | | | | | | | |
| AD1010SS | 6 | 0.4 | 3.0 | 11.5 | 1.4 | 41 | 14 | 1.0 | 4.0 | 15.1 | 2.3 | 66 | 22 | 1.5 | 4.6 | 17.6 | 3.2 | 90 | 26 | 1.8 | 5.7 | 21.4 | 3.5 | 98 | 38 | 2.6 | 6.9 | 26.0 | 4.7 | 133 | 12 | 0.8 | 10 | 0.7 | 9 | 23 | 14 | 36 | 16 | 41 | 36 | 91 | AD1010SS |
| | 8 | 0.6 | 2.7 | 10.1 | 1.8 | 50 | 18 | 1.2 | 3.3 | 12.4 | 2.9 | 82 | 26 | 1.8 | 4.1 | 15.4 | 3.7 | 105 | 32 | 2.2 | 4.9 | 18.6 | 4.3 | 121 | 54 | 3.7 | 5.3 | 20.1 | 6.6 | 188 | 22 | 1.5 | 20 | 1.4 | 11 | 28 | 13 | 33 | 16 | 41 | 42 | 107 | |
| | 10 | 0.7 | 2.2 | 8.3 | 2.1 | 59 | 20 | 1.4 | 2.9 | 11.0 | 3.2 | 91 | 30 | 2.1 | 3.4 | 12.9 | 4.3 | 122 | 38 | 2.6 | 4.2 | 15.7 | 5.1 | 144 | 62 | 4.3 | 4.6 | 17.3 | 7.8 | 221 | 34 | 2.3 | 30 | 2.1 | 8 | 20 | 12 | 30 | 16 | 41 | 45 | 114 | |
| | 12 | 0.8 | 1.8 | 6.9 | 2.4 | 69 | 22 | 1.5 | 2.3 | 8.9 | 3.6 | 101 | 34 | 2.3 | 2.8 | 10.4 | 5.0 | 140 | 46 | 3.2 | 2.7 | 10.3 | 6.3 | 180 | 70 | 4.8 | 3.1 | 11.9 | 9.1 | 258 | 46 | 3.2 | 40 | 2.8 | 9 | 23 | 12 | 30 | 15 | 38 | 48 | 122 | |
| | | | | | | | | | | | | | | | | | | | | | | | | | | | | | | | 70 | 4.8 | 60 | 4.1 | 12 | 30 | 15 | 38 | 18 | 46 | 42 | 107 | |

## Internal Mix 360° Hollow Circular Pattern - 1/4 NPT

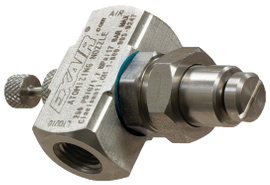

**Model: AT1010SS**
**Material:** Type 303 Stainless Steel

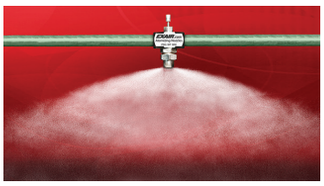

This 360° circular pattern nozzle can be used to coat inside diameters or cover a broad area over 4' (1219mm).

### Model AT1010SS

1/4 NPT internal mix 360° nozzles are designed for applications where the spray pattern must be oriented away from the nozzle in all directions. 360° nozzles are ideal where a smooth, even coating is needed on the ID of pipe or similar ductwork. They also work great for operations where a mist over a broad area is needed, such as dust suppression, humidification and cooling.

**For pressure fed applications not requiring independent air and liquid control.**

### Dimensions and Airflow Pattern

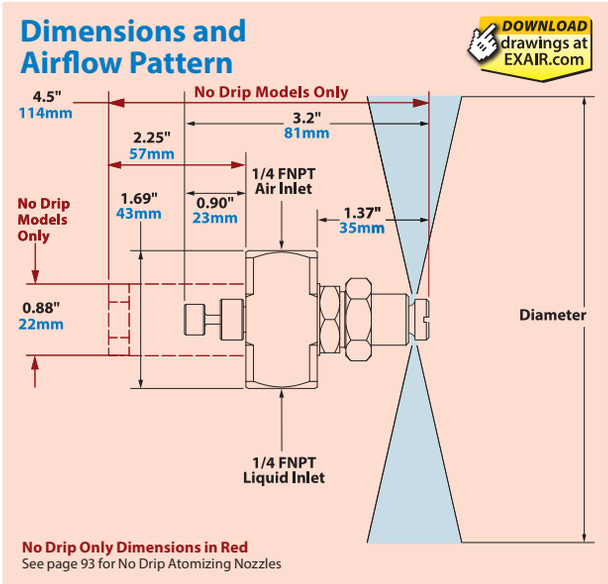


| Model | 10 PSI/0.7 BAR Liquid | | | | | | 20 PSI/1.4 BAR Liquid | | | | | | 30 PSI/2.1 BAR Liquid | | | | | | 40 PSI/2.8 BAR Liquid | | | | | | 60 PSI/4.1 BAR Liquid | | | | | | Spray Dimensions | | | | | | |
|---|---|---|---|---|---|---|---|---|---|---|---|---|---|---|---|---|---|---|---|---|---|---|---|---|---|---|---|---|---|---|---|---|---|---|---|---|---|
| | Air Pressure PSI/BAR | | GPH/LPH | | SCFM/SLPM | | Air Pressure PSI/BAR | | GPH/LPH | | SCFM/SLPM | | Air Pressure PSI/BAR | | GPH/LPH | | SCFM/SLPM | | Air Pressure PSI/BAR | | GPH/LPH | | SCFM/SLPM | | Air Pressure PSI/BAR | | GPH/LPH | | SCFM/SLPM | | Pressure | | Diameter | | |
| | | | | | | | | | | | | | | | | | | | | | | | | | | | | | | | Air PSI/BAR | Liquid PSI/BAR | in | cm | |
| AT1010SS | 20 | 1.4 | 4.5 | 16.8 | 4.3 | 121 | 34 | 2.3 | 7.3 | 27.5 | 6.4 | 182 | 50 | 3.4 | 8.1 | 30.6 | 8.9 | 251 | 60 | 4.1 | 11.5 | 43.5 | 10.0 | 283 | 85 | 5.9 | 14.7 | 55.7 | 13.3 | 376 | 20 | 1.4 | 10 | 0.7 | 36 | 91 | AT1010SS |
| | 24 | 1.7 | 2.6 | 9.7 | 5.3 | 150 | 38 | 2.6 | 5.2 | 19.6 | 7.3 | 206 | 56 | 3.9 | 5.4 | 20.3 | 10.0 | 285 | 70 | 4.8 | 7.1 | 26.8 | 11.8 | 335 | 90 | 6.2 | 12.7 | 47.9 | 14.1 | 398 | 34 | 2.3 | 20 | 1.4 | 39 | 99 | |
| | 26 | 1.8 | 2.0 | 7.5 | 5.7 | 162 | 42 | 2.9 | 3.6 | 13.5 | 8.2 | 231 | 60 | 4.1 | 4.2 | 15.7 | 10.7 | 303 | 80 | 5.5 | 4.1 | 15.4 | 13.5 | 383 | 95 | 6.6 | 10.6 | 40.2 | 14.9 | 423 | 50 | 3.4 | 30 | 2.1 | 44 | 112 | |
| | 28 | 1.9 | 1.6 | 5.9 | 6.2 | 176 | 48 | 3.3 | 2.1 | 7.8 | 9.3 | 264 | 70 | 4.8 | 2.0 | 7.4 | 12.6 | 356 | 90 | 6.2 | 2.0 | 7.7 | 15.5 | 439 | 100 | 6.9 | 8.9 | 33.7 | 15.8 | 449 | 60 | 4.1 | 40 | 2.8 | 49 | 124 | |
| | | | | | | | | | | | | | | | | | | | | | | | | | | | | | | | 85 | 5.9 | 60 | 4.1 | 53 | 135 | |

An INTELLIGENT COMPRESSED AIR® Product

## External Mix Round Pattern - 1/4 NPT

**Model: ER1010SS**
**Material:** Type 303 Stainless Steel

**Model: ER1020SS**
**Material:** Type 303 Stainless Steel

**Model: ER1030SS**
**Material:** Type 303 Stainless Steel

**Model: ER1040SS**
**Material:** Type 303 Stainless Steel

**Model: ER1050SS**
**Material:** Type 303 Stainless Steel

### Model ER1010SS, ER1020SS, ER1030SS, ER1040SS and ER1050SS

1/4 NPT external mix round pattern nozzles are great where a high volume of liquid is needed over a specific area or general area, but not in a flat pattern. Applications include spot treatments of parts, covering irregularly shaped objects or covering a container of parts with a heavy coat. They are also an excellent choice for controlling heavy dust and particulates. Since they are external mix, airflow and liquid flow can be controlled independently.

**For pressure fed applications with independent air and liquid control.**

**(2) Model ER1020SS atomizing nozzles are used to apply a fire retardant coating to wood trim.**

## Dimensions and Airflow Pattern

DOWNLOAD drawings at EXAIR.com

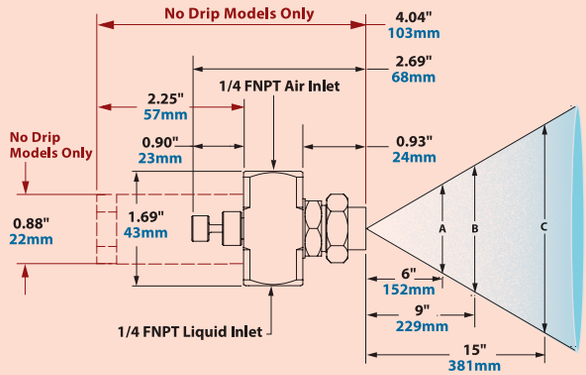


**No Drip Only Dimensions in Red**
See page 93 for No Drip Atomizing Nozzles

| Model | 3 PSI/0.2 BAR Liquid | | | | | | 5 PSI/0.3 BAR Liquid | | | | | | 10 PSI/0.7 BAR Liquid | | | | | | 20 PSI/1.4 BAR Liquid | | | | | | 40 PSI/2.8 BAR Liquid | | | | | |
|---|---|---|---|---|---|---|---|---|---|---|---|---|---|---|---|---|---|---|---|---|---|---|---|---|---|---|---|---|---|---|
| | Air Pressure PSI/BAR | | GPH/LPH | | SCFM/SLPM | | Air Pressure PSI/BAR | | GPH/LPH | | SCFM/SLPM | | Air Pressure PSI/BAR | | GPH/LPH | | SCFM/SLPM | | Air Pressure PSI/BAR | | GPH/LPH | | SCFM/SLPM | | Air Pressure PSI/BAR | | GPH/LPH | | SCFM/SLPM | |
| ER1010SS | 5 | 0.3 | 1.0 | 3.8 | 0.9 | 25.5 | 5 | 0.3 | 1.4 | 5.3 | 0.9 | 25.5 | 10 | 0.7 | 1.9 | 7.2 | 1.3 | 36.8 | 20 | 1.4 | 2.7 | 10.2 | 1.9 | 53.8 | 20 | 1.4 | 3.8 | 14.4 | 1.9 | 53.8 |
| | 10 | 0.7 | | | 1.3 | 36.8 | 10 | 0.7 | | | 1.3 | 36.8 | 20 | 1.4 | | | 1.9 | 53.8 | 40 | 2.8 | | | 3.0 | 85.0 | 40 | 2.8 | | | 3.0 | 85.0 |
| | 20 | 1.4 | | | 1.9 | 53.8 | 30 | 2.1 | | | 2.4 | 68.0 | 40 | 2.8 | | | 3.0 | 85.0 | 60 | 4.1 | | | 4.1 | 116 | 60 | 4.1 | | | 4.1 | 116 |
| | 40 | 2.8 | | | 3.0 | 85.0 | 50 | 3.4 | | | 3.5 | 99.1 | 60 | 4.1 | | | 4.1 | 116 | 90 | 6.2 | | | 5.7 | 161 | 90 | 6.2 | | | 5.7 | 161 |
| ER1020SS | 6 | 0.4 | 2.5 | 9.5 | 0.9 | 25.5 | 10 | 0.7 | 3.2 | 12.1 | 1.3 | 36.8 | 10 | 0.7 | 4.3 | 16.3 | 1.3 | 36.8 | 20 | 1.4 | 5.9 | 22.3 | 2.9 | 82.1 | 40 | 2.8 | 7.5 | 28.4 | 3.0 | 85.0 |
| | 10 | 0.7 | | | 1.3 | 36.8 | 20 | 1.4 | | | 1.8 | 51.0 | 20 | 1.4 | | | 1.9 | 53.8 | 40 | 2.8 | | | 3.1 | 87.8 | 60 | 4.1 | | | 4.1 | 116 |
| | 30 | 2.1 | | | 2.4 | 68.0 | 40 | 2.8 | | | 3.1 | 87.8 | 40 | 2.8 | | | 3.1 | 87.8 | 60 | 4.1 | | | 4.1 | 116 | 80 | 5.5 | | | 5.3 | 150 |
| | 50 | 3.4 | | | 3.6 | 102 | 60 | 4.1 | | | 4.1 | 116 | 60 | 4.1 | | | 4.1 | 116 | 90 | 6.2 | | | 5.9 | 167 | 90 | 6.2 | | | 5.9 | 167 |
| ER1030SS | 10 | 0.7 | 4.4 | 16.7 | 4.0 | 113 | 10 | 0.7 | 5.5 | 20.8 | 4.0 | 113 | 15 | 1.0 | 7.6 | 28.8 | 4.9 | 139 | 30 | 2.1 | 11.0 | 41.6 | 7.7 | 218 | 40 | 2.8 | 14.0 | 53.0 | 9.5 | 269 |
| | 20 | 1.4 | | | 6.0 | 170 | 20 | 1.4 | | | 6.0 | 170 | 30 | 2.1 | | | 7.7 | 218 | 40 | 2.8 | | | 9.5 | 269 | 50 | 3.4 | | | 11.2 | 317 |
| | 40 | 2.8 | | | 9.5 | 269 | 40 | 2.8 | | | 9.5 | 269 | 50 | 3.4 | | | 11.2 | 317 | 60 | 4.1 | | | 11.7 | 331 | 60 | 4.1 | | | 11.7 | 331 |
| | 50 | 3.4 | | | 11.2 | 317 | 60 | 4.1 | | | 11.7 | 331 | 70 | 4.8 | | | 13.4 | 379 | 80 | 5.5 | | | 15.3 | 433 | 80 | 5.5 | | | 15.3 | 433 |
| ER1040SS | 15 | 1.0 | 10.0 | 37.9 | 4.9 | 139 | 20 | 1.4 | 13.5 | 51.1 | 6.0 | 170 | 30 | 2.1 | 18.8 | 71.2 | 7.7 | 218 | 40 | 2.8 | 27.6 | 104 | 9.5 | 269 | 50 | 3.4 | 31.0 | 117 | 11.2 | 317 |
| | 30 | 2.1 | | | 7.7 | 218 | 30 | 2.1 | | | 7.7 | 218 | 40 | 2.8 | | | 9.5 | 269 | 50 | 3.4 | | | 11.2 | 317 | 60 | 4.1 | | | 11.7 | 331 |
| | 40 | 2.8 | | | 9.5 | 269 | 40 | 2.8 | | | 9.5 | 269 | 60 | 4.1 | | | 11.7 | 331 | 60 | 4.1 | | | 11.7 | 331 | 70 | 4.8 | | | 13.4 | 379 |
| | 50 | 3.4 | | | 11.2 | 317 | 60 | 4.1 | | | 11.7 | 331 | 80 | 5.5 | | | 15.3 | 433 | 80 | 5.5 | | | 15.3 | 433 | 80 | 5.5 | | | 15.3 | 433 |
| ER1050SS | 40 | 2.8 | 18.0 | 68.1 | 14.0 | 396 | 55 | 3.8 | 26.0 | 98.0 | 18.0 | 510 | 65 | 4.5 | 41.0 | 155 | 21.0 | 595 | 80 | 5.5 | 60.0 | 227 | 25.3 | 716 | – | – | | | – | – |
| | 50 | 3.4 | | | 16.8 | 470 | 65 | 4.5 | | | 21.0 | 595 | 70 | 4.8 | | | 22.3 | 631 | 90 | 6.2 | | | 27.9 | 790 | – | – | | | – | – |
| | 60 | 4.1 | | | 19.7 | 558 | 70 | 4.8 | | | 22.3 | 631 | 80 | 5.5 | | | 25.3 | 716 | – | – | | | – | – | – | – | | | – | – |
| | 65 | 4.5 | | | 21.0 | 595 | 80 | 5.5 | | | 25.3 | 716 | 90 | 6.2 | | | 27.9 | 790 | – | – | | | – | – | – | – | | | – | – |

Note: When air pressure is 10× or more than liquid pressure, liquid flow may diminish.

### Spray Dimensions

| Pressure: Air PSI/BAR | | Pressure: Liquid PSI/BAR | | Width A in | Width A cm | Width B in | Width B cm | Width C in | Width C cm | Max. Depth feet/m | | |
|---|---|---|---|---|---|---|---|---|---|---|---|---|
| 10 | 0.7 | 3 | 0.2 | 3.0 | 7.6 | 4.3 | 10.9 | 6.3 | 16.0 | 9 | 2.7 | ER1010SS |
| 20 | 1.4 | 5 | 0.3 | 3.3 | 8.4 | 4.5 | 11.4 | 6.8 | 17.3 | 11 | 3.4 | |
| 40 | 2.8 | 10 | 0.7 | 3.5 | 8.9 | 5.3 | 13.5 | 7.5 | 19.1 | 13 | 4.0 | |
| 40 | 2.8 | 20 | 1.4 | 3.5 | 8.9 | 5.0 | 12.7 | 7.0 | 17.8 | 14 | 4.3 | |
| 60 | 4.1 | 40 | 2.8 | 4.0 | 10.2 | 5.5 | 14.0 | 8.0 | 20.3 | 15 | 4.6 | |
| 10 | 0.7 | 3 | 0.2 | 3.8 | 9.7 | 5.0 | 12.7 | 7.5 | 19.1 | 10 | 3.0 | ER1020SS |
| 20 | 1.4 | 5 | 0.3 | 4.0 | 10.2 | 5.8 | 14.7 | 7.0 | 17.8 | 12 | 3.7 | |
| 40 | 2.8 | 10 | 0.7 | 4.3 | 10.9 | 6.0 | 15.2 | 8.3 | 21.1 | 15 | 4.6 | |
| 40 | 2.8 | 20 | 1.4 | 4.5 | 11.4 | 6.0 | 15.2 | 8.3 | 21.1 | 15 | 4.6 | |
| 60 | 4.1 | 40 | 2.8 | 5.0 | 12.7 | 6.5 | 16.5 | 8.5 | 21.6 | 16 | 4.9 | |
| 10 | 0.7 | 3 | 0.2 | 4.3 | 10.9 | 6.0 | 15.2 | 8.8 | 22.4 | 13 | 4.0 | ER1030SS |
| 40 | 2.8 | 5 | 0.3 | 4.5 | 11.4 | 6.5 | 16.5 | 8.5 | 21.6 | 23 | 7.0 | |
| 40 | 2.8 | 10 | 0.7 | 4.8 | 12.2 | 6.8 | 17.3 | 9.0 | 22.9 | 24 | 7.3 | |
| 60 | 4.1 | 20 | 1.4 | 4.5 | 11.4 | 6.8 | 17.3 | 9.0 | 22.9 | 29 | 8.8 | |
| 60 | 4.1 | 40 | 2.8 | 5.3 | 13.5 | 7.0 | 17.8 | 9.3 | 23.6 | 30 | 9.1 | |
| 20 | 1.4 | 3 | 0.2 | 5.8 | 14.7 | 7.5 | 19.1 | 10.0 | 25.4 | 15 | 4.6 | ER1040SS |
| 40 | 2.8 | 5 | 0.3 | 6.0 | 15.2 | 8.0 | 20.3 | 10.3 | 26.2 | 19 | 5.8 | |
| 60 | 4.1 | 10 | 0.7 | 6.0 | 15.2 | 8.0 | 20.3 | 10.5 | 26.7 | 23 | 7.0 | |
| 60 | 4.1 | 20 | 1.4 | 5.5 | 14.0 | 7.0 | 17.8 | 9.0 | 22.9 | 24 | 7.3 | |
| 80 | 5.5 | 40 | 2.8 | 4.5 | 11.4 | 6.5 | 16.5 | 9.5 | 24.1 | 30 | 9.1 | |
| 40 | 2.8 | 3 | 0.2 | 6.5 | 16.5 | 8.8 | 22.4 | 11.0 | 27.9 | 23 | 7.0 | ER1050SS |
| 70 | 4.8 | 5 | 0.3 | 6.5 | 16.5 | 9.0 | 22.9 | 10.0 | 25.4 | 28 | 8.5 | |
| 80 | 5.5 | 10 | 0.7 | 6.5 | 16.5 | 9.0 | 22.9 | 11.0 | 27.9 | 30 | 9.1 | |
| 90 | 6.2 | 20 | 1.4 | 6.0 | 15.2 | 8.0 | 20.3 | 11.0 | 27.9 | 32 | 9.8 | |

# Air Atomizing Spray Nozzles

## External Mix Narrow Angle Flat Fan Pattern - 1/4 NPT

**Model: EF1010SS**
**Material:** Type 303 Stainless Steel

**Model: EF1020SS**
**Material:** Type 303 Stainless Steel

**Model: EF1030SS**
**Material:** Type 303 Stainless Steel

**Model: EF1040SS**
**Material:** Type 303 Stainless Steel



### Model EF1010SS, EF1020SS, EF1030SS and EF1040SS

1/4 NPT external mix narrow angle flat fan pattern nozzles are great where a high volume of liquid is needed over a concentrated area. Since they are external mix, airflow and liquid flow can be controlled independently. External mix narrow angle flat fan pattern nozzles are the best choice where thicker liquids for a heavy coating are needed over a narrow band, such as a paint line.

**For pressure fed applications with independent air and liquid control.**

A Model EF1020SS is used to supply humidification for a corrosion test chamber.

## Dimensions and Airflow Pattern

DOWNLOAD drawings at EXAIR.com

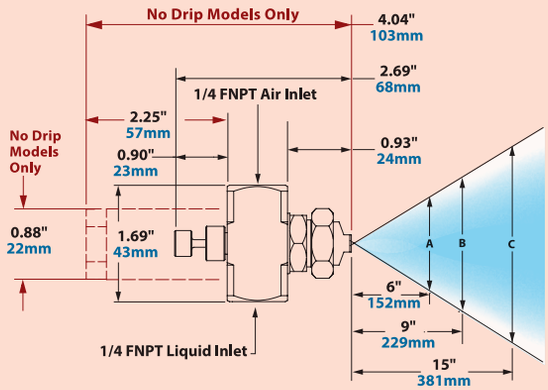


**No Drip Only Dimensions in Red**
See page 93 for No Drip Atomizing Nozzles

| Model | 3 PSI/0.2 BAR Liquid | | | | | | 5 PSI/0.3 BAR Liquid | | | | | | 10 PSI/0.7 BAR Liquid | | | | | | 20 PSI/1.4 BAR Liquid | | | | | | 40 PSI/2.8 BAR Liquid | | | | | | Spray Dimensions | | | | | | | | | | | | | |
|---|---|---|---|---|---|---|---|---|---|---|---|---|---|---|---|---|---|---|---|---|---|---|---|---|---|---|---|---|---|---|---|---|---|---|---|---|---|---|---|---|---|---|---|---|
| | Air Pressure PSI/ | BAR | GPH/ | LPH | SCFM/ | SLPM | Air Pressure PSI/ | BAR | GPH/ | LPH | SCFM/ | SLPM | Air Pressure PSI/ | BAR | GPH/ | LPH | SCFM/ | SLPM | Air Pressure PSI/ | BAR | GPH/ | LPH | SCFM/ | SLPM | Air Pressure PSI/ | BAR | GPH/ | LPH | SCFM/ | SLPM | Pressure: Air PSI/ | BAR | Pressure: Liquid PSI/ | BAR | Width A in | cm | Width B in | cm | Width C in | cm | Max. Depth feet/m | | |
| EF1010SS | 5 | 0.3 | 1.0 | 3.8 | 0.8 | 22.7 | 10 | 0.7 | 1.4 | 5.3 | 1.0 | 28.3 | 15 | 1.0 | 1.9 | 7.2 | 1.3 | 36.8 | 25 | 1.7 | 2.7 | 10.2 | 1.8 | 51.0 | 45 | 3.1 | 3.8 | 14.4 | 2.7 | 76.5 | 5 | 0.3 | 3 | 0.2 | 4.0 | 10.2 | 5.8 | 14.7 | 9.5 | 24.1 | 6 | 1.8 | EF1010SS |
| | 10 | 0.7 | | | 1.0 | 28.3 | 20 | 1.4 | | | 1.5 | 42.5 | 25 | 1.7 | | | 1.8 | 51.0 | 40 | 2.8 | | | 2.5 | 70.8 | 60 | 4.1 | | | 3.4 | 96.3 | 25 | 1.7 | 5 | 0.3 | 5.5 | 14.0 | 8.0 | 20.3 | 10.0 | 25.4 | 12 | 3.7 | |
| | 20 | 1.4 | | | 1.5 | 42.5 | 30 | 2.1 | | | 2.0 | 56.6 | 40 | 2.8 | | | 2.5 | 70.8 | 60 | 4.1 | | | 3.4 | 96.3 | 75 | 5.2 | | | 4.1 | 116 | 25 | 1.7 | 20 | 1.4 | 6.5 | 16.5 | 9.5 | 24.1 | 13.0 | 33.0 | 13 | 4.0 | |
| | 40 | 2.8 | | | 2.5 | 70.8 | 50 | 3.4 | | | 2.9 | 82.1 | 60 | 4.1 | | | 3.4 | 96.3 | 90 | 6.2 | | | 4.7 | 133 | 95 | 6.5 | | | 5.1 | 144 | 50 | 3.4 | 20 | 1.4 | 6.3 | 16.0 | 9.3 | 23.6 | 12.0 | 30.5 | 16 | 4.9 | |
| | | | | | | | | | | | | | | | | | | | | | | | | | | | | | | | 75 | 5.2 | 40 | 2.8 | 6.5 | 16.5 | 9.5 | 24.1 | 13.0 | 33.0 | 18 | 5.5 | |
| EF1020SS | 10 | 0.7 | 2.5 | 9.5 | 1.0 | 28.3 | 15 | 1.0 | 3.2 | 12.1 | 1.3 | 36.8 | 20 | 1.4 | 4.3 | 16.3 | 1.5 | 42.5 | 35 | 2.4 | 5.9 | 22.3 | 2.2 | 62.3 | 50 | 3.4 | 7.5 | 28.4 | 2.9 | 82.1 | 10 | 0.7 | 3 | 0.2 | 4.5 | 11.4 | 7.0 | 17.8 | 11.0 | 27.9 | 9 | 2.7 | EF1020SS |
| | 20 | 1.4 | | | 1.5 | 42.5 | 25 | 1.7 | | | 1.8 | 51.0 | 30 | 2.1 | | | 2.0 | 56.6 | 50 | 3.4 | | | 2.9 | 82.1 | 60 | 4.1 | | | 3.4 | 96.3 | 30 | 2.1 | 5 | 0.3 | 6.0 | 15.2 | 10.0 | 25.4 | 14.0 | 35.6 | 14 | 4.3 | |
| | 30 | 2.1 | | | 2.0 | 56.6 | 40 | 2.8 | | | 2.5 | 70.8 | 50 | 3.4 | | | 2.9 | 82.1 | 70 | 4.8 | | | 3.8 | 108 | 80 | 5.5 | | | 4.3 | 122 | 35 | 2.4 | 20 | 1.4 | 6.5 | 16.5 | 11.0 | 27.9 | 16.0 | 40.6 | 17 | 5.2 | |
| | 50 | 3.4 | | | 2.9 | 82.1 | 60 | 4.1 | | | 3.4 | 96.3 | 70 | 4.8 | | | 3.8 | 108 | 90 | 6.2 | | | 4.7 | 133 | 100 | 6.9 | | | 5.2 | 147 | 60 | 4.1 | 20 | 1.4 | 7.5 | 19.1 | 11.5 | 29.2 | 18.0 | 45.7 | 20 | 6.1 | |
| | | | | | | | | | | | | | | | | | | | | | | | | | | | | | | | 75 | 5.2 | 40 | 2.8 | 7.5 | 19.1 | 12.0 | 30.5 | 17.0 | 43.2 | 22 | 6.7 | |
| EF1030SS | 10 | 0.7 | 4.4 | 16.7 | 3.5 | 99.1 | 20 | 1.4 | 5.5 | 20.8 | 5.3 | 150 | 25 | 1.7 | 7.6 | 28.8 | 6.1 | 173 | 40 | 2.8 | 11.0 | 41.6 | 8.4 | 238 | 50 | 3.4 | 14.0 | 53.0 | 10.0 | 283 | 10 | 0.7 | 3 | 0.2 | 6.0 | 15.2 | 9.0 | 22.9 | 12.0 | 30.5 | 12 | 3.7 | EF1030SS |
| | 20 | 1.4 | | | 5.3 | 150 | 30 | 2.1 | | | 6.9 | 195 | 35 | 2.4 | | | 7.6 | 215 | 50 | 3.4 | | | 10.0 | 283 | 60 | 4.1 | | | 11.5 | 326 | 35 | 2.4 | 5 | 0.3 | 6.8 | 17.3 | 9.0 | 22.9 | 12.0 | 30.5 | 20 | 6.1 | |
| | 30 | 2.1 | | | 6.9 | 195 | 40 | 2.8 | | | 8.4 | 238 | 50 | 3.4 | | | 10.0 | 283 | 70 | 4.8 | | | 12.7 | 360 | 80 | 5.5 | | | 13.7 | 388 | 40 | 2.8 | 10 | 0.7 | 7.0 | 17.8 | 10.0 | 25.4 | 13.0 | 33.0 | 23 | 7.0 | |
| | 50 | 3.4 | | | 10.0 | 283 | 60 | 4.1 | | | 11.5 | 326 | 70 | 4.8 | | | 12.7 | 360 | 90 | 6.2 | | | 14.8 | 419 | 95 | 6.5 | | | 15.1 | 428 | 60 | 4.1 | 20 | 1.4 | 7.0 | 17.8 | 11.0 | 27.9 | 14.0 | 35.6 | 28 | 8.5 | |
| | | | | | | | | | | | | | | | | | | | | | | | | | | | | | | | 75 | 5.2 | 40 | 2.8 | 7.0 | 17.8 | 11.0 | 27.9 | 14.0 | 35.6 | 30 | 9.1 | |
| EF1040SS | 15 | 1.0 | 10.0 | 37.9 | 4.4 | 125 | 25 | 1.7 | 13.5 | 51.1 | 6.1 | 173 | 35 | 2.4 | 18.8 | 71.2 | 7.6 | 215 | 45 | 3.1 | 27.6 | 104 | 9.2 | 261 | 55 | 3.8 | 31.0 | 117 | 10.7 | 303 | 15 | 1.0 | 3 | 0.2 | 6.0 | 15.2 | 10.0 | 25.4 | 14.0 | 35.6 | 13 | 4.0 | EF1040SS |
| | 25 | 1.7 | | | 6.1 | 173 | 35 | 2.4 | | | 7.6 | 215 | 45 | 3.1 | | | 9.2 | 261 | 55 | 3.8 | | | 10.7 | 303 | 65 | 4.5 | | | 12.2 | 345 | 30 | 2.1 | 3 | 0.2 | 6.8 | 17.3 | 11.0 | 27.9 | 14.0 | 35.6 | 17 | 5.2 | |
| | 40 | 2.8 | | | 8.4 | 238 | 50 | 3.4 | | | 10.0 | 283 | 60 | 4.1 | | | 11.5 | 326 | 70 | 4.8 | | | 12.7 | 360 | 80 | 5.5 | | | 13.7 | 388 | 50 | 3.4 | 10 | 0.7 | 7.5 | 19.1 | 12.0 | 30.5 | 15.0 | 38.1 | 22 | 6.7 | |
| | 50 | 3.4 | | | 10.0 | 283 | 60 | 4.1 | | | 11.5 | 326 | 80 | 5.5 | | | 13.7 | 388 | 90 | 6.2 | | | 14.8 | 419 | 100 | 6.9 | | | 16.2 | 459 | 60 | 4.1 | 20 | 1.4 | 8.0 | 20.3 | 12.0 | 30.5 | 16.0 | 40.6 | 25 | 7.6 | |
| | | | | | | | | | | | | | | | | | | | | | | | | | | | | | | | 80 | 5.5 | 40 | 2.8 | 7.0 | 17.8 | 11.0 | 27.9 | 15.0 | 38.1 | 27 | 8.2 | |



EXAIR
For Technical Assistance, Call an EXAIR Application Engineer 1-800-903-9247
Toll Free FAX (866) 329-3924 • E-mail: techelp@exair.com • www.exair.com

An INTELLIGENT COMPRESSED AIR® Product

## External Mix Wide Angle Flat Fan Pattern - 1/4 NPT

**Model: EB1010SS**
**Material:** Type 303 Stainless Steel

**Model: EB1020SS**
**Material:** Type 303 Stainless Steel

**Model: EB1030SS**
**Material:** Type 303 Stainless Steel

**Model: EB1040SS**
**Material:** Type 303 Stainless Steel

### Model EB1010SS, EB1020SS, EB1030SS and EB1040SS

1/4 NPT external mix wide angle flat fan pattern nozzles are great where a high volume of liquid is needed over a wide area such as a conveyor line. Because they are external mix, airflow and liquid flow can be controlled independently. Common applications are those which require a moderate application of liquid over a broad area, such as cooling or coating wide webs.

**For pressure fed applications with independent air and liquid control.**

**(2) Model EB1040SS nozzles are used to rinse wine bottles after capping.**

### Dimensions and Airflow Pattern

DOWNLOAD drawings at EXAIR.com

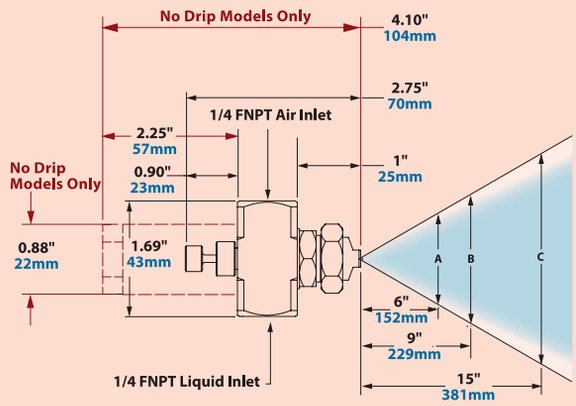


**No Drip Only Dimensions in Red**
See page 93 for No Drip Atomizing Nozzles

| Model | 3 PSI/0.2 BAR Liquid | | | | | | 5 PSI/0.3 BAR Liquid | | | | | | 10 PSI/0.7 BAR Liquid | | | | | | 20 PSI/1.4 BAR Liquid | | | | | | 40 PSI/2.8 BAR Liquid | | | | | |
|---|---|---|---|---|---|---|---|---|---|---|---|---|---|---|---|---|---|---|---|---|---|---|---|---|---|---|---|---|---|---|
| | Air Pressure PSI/ | BAR | GPH/ | LPH | SCFM/ | SLPM | Air Pressure PSI/ | BAR | GPH/ | LPH | SCFM/ | SLPM | Air Pressure PSI/ | BAR | GPH/ | LPH | SCFM/ | SLPM | Air Pressure PSI/ | BAR | GPH/ | LPH | SCFM/ | SLPM | Air Pressure PSI/ | BAR | GPH/ | LPH | SCFM/ | SLPM |
| EB1010SS | 5 | 0.3 | 1.0 | 3.8 | 0.9 | 25.5 | 5 | 0.3 | 1.4 | 5.3 | 0.9 | 25.5 | 8 | 0.6 | 1.9 | 7.2 | 1.1 | 31.1 | 10 | 0.7 | 2.7 | 10.2 | 1.3 | 36.8 | 15 | 1.0 | 3.8 | 14.4 | 1.7 | 48.1 |
| | 8 | 0.6 | | | 1.1 | 31.1 | 10 | 0.7 | | | 1.3 | 36.8 | 10 | 0.7 | | | 1.3 | 36.8 | 20 | 1.4 | | | 2.0 | 56.6 | 20 | 1.4 | | | 2.0 | 56.6 |
| | 10 | 0.7 | | | 1.3 | 36.8 | 15 | 1.0 | | | 1.7 | 48.1 | 20 | 1.4 | | | 2.0 | 56.6 | 30 | 2.1 | | | 2.6 | 73.6 | 30 | 2.1 | | | 2.6 | 73.6 |
| | 15 | 1.0 | | | 1.7 | 48.1 | 20 | 1.4 | | | 2.0 | 56.6 | 30 | 2.1 | | | 2.6 | 73.6 | 35 | 2.4 | | | 3.0 | 85.0 | 35 | 2.4 | | | 3.0 | 85.0 |
| EB1020SS | 6 | 0.4 | 2.5 | 9.5 | 1.0 | 28.3 | 6 | 0.4 | 3.2 | 12.1 | 1.0 | 28.3 | 6 | 0.4 | 4.3 | 16.3 | 1.0 | 28.3 | 10 | 0.7 | 5.9 | 22.3 | 1.3 | 36.8 | 20 | 1.4 | 7.5 | 28.4 | 2.0 | 56.6 |
| | 7 | 0.5 | | | 1.1 | 31.1 | 8 | 0.6 | | | 1.1 | 31.1 | 8 | 0.6 | | | 1.1 | 31.1 | 12 | 0.8 | | | 1.5 | 42.5 | 25 | 1.7 | | | 2.3 | 65.1 |
| | 8 | 0.6 | | | 1.1 | 31.1 | 9 | 0.6 | | | 1.2 | 34.0 | 10 | 0.7 | | | 1.3 | 36.8 | 15 | 1.0 | | | 1.7 | 48.1 | 30 | 2.1 | | | 2.6 | 74.0 |
| | 10 | 0.7 | | | 1.3 | 36.8 | 10 | 0.7 | | | 1.3 | 36.8 | 12 | 0.8 | | | 1.5 | 42.5 | 20 | 1.4 | | | 2.0 | 56.6 | 35 | 2.4 | | | 3.0 | 85.0 |
| EB1030SS | 8 | 0.6 | 4.4 | 16.7 | 3.4 | 96.3 | 10 | 0.7 | 5.5 | 20.8 | 3.8 | 108 | 15 | 1.0 | 7.6 | 28.8 | 4.8 | 136 | 35 | 2.4 | 11.0 | 41.6 | 8.4 | 238 | 50 | 3.4 | 14.0 | 53.0 | 11.0 | 311 |
| | 15 | 1.0 | | | 4.8 | 136 | 20 | 1.4 | | | 5.9 | 167 | 25 | 1.7 | | | 6.7 | 190 | 45 | 3.1 | | | 10.1 | 286 | 65 | 4.5 | | | 12.3 | 348 |
| | 20 | 1.4 | | | 5.9 | 167 | 25 | 1.7 | | | 6.7 | 190 | 35 | 2.4 | | | 8.4 | 238 | 55 | 3.8 | | | 11.7 | 331 | 85 | 5.9 | | | 15.7 | 445 |
| | 25 | 1.7 | | | 6.7 | 190 | 30 | 2.1 | | | 7.6 | 215 | 40 | 2.8 | | | 9.3 | 263 | 60 | 4.1 | | | 12.0 | 340 | 95 | 6.5 | | | 16.8 | 476 |
| EB1040SS | 10 | 0.7 | 10.0 | 37.9 | 3.8 | 108 | 15 | 1.0 | 13.5 | 51.1 | 4.8 | 136 | 25 | 1.7 | 18.8 | 71.2 | 6.7 | 190 | 45 | 3.1 | 27.6 | 104 | 10.1 | 286 | 75 | 5.2 | 31.0 | 117 | 13.7 | 388 |
| | 15 | 1.0 | | | 4.8 | 136 | 20 | 1.4 | | | 5.9 | 167 | 30 | 2.1 | | | 7.6 | 215 | 50 | 3.4 | | | 11.0 | 311 | 85 | 5.9 | | | 15.7 | 445 |
| | 20 | 1.4 | | | 5.9 | 167 | 30 | 2.1 | | | 7.6 | 215 | 40 | 2.8 | | | 9.3 | 263 | 70 | 4.8 | | | 13.4 | 379 | 95 | 6.5 | | | 16.8 | 476 |
| | 25 | 1.7 | | | 6.7 | 190 | 35 | 2.4 | | | 8.4 | 238 | 45 | 3.1 | | | 10.1 | 286 | 80 | 5.5 | | | 14.8 | 419 | 100 | 6.9 | | | 18.3 | 518 |

| Spray Dimensions | | | | | | | | | | | | | |
|---|---|---|---|---|---|---|---|---|---|---|---|---|---|
| Pressure | | | | Width | | | | | | | | Max. Depth feet/m | | |
| Air PSI/ | BAR | Liquid PSI/ | BAR | A | | B | | C | | | | | |
| | | | | in | cm | in | cm | in | cm | | | | |
| 10 | 0.7 | 5 | 0.3 | 8.0 | 20.3 | 11.0 | 27.9 | 14.0 | 35.6 | 9 | 2.7 | EB1010SS |
| 15 | 1.0 | 10 | 0.7 | 9.0 | 22.9 | 12.0 | 30.5 | 17.0 | 43.2 | 11 | 3.4 | |
| 20 | 1.4 | 20 | 1.4 | 9.3 | 23.6 | 14.0 | 35.6 | 19.0 | 48.3 | 11 | 3.4 | |
| 25 | 1.7 | 30 | 2.1 | 11.0 | 27.9 | 15.0 | 38.1 | 20.0 | 50.8 | 13 | 4.0 | |
| 25 | 1.7 | 40 | 2.8 | 11.0 | 27.9 | 15.0 | 38.1 | 21.0 | 53.3 | 14 | 4.3 | |
| 8 | 0.6 | 5 | 0.3 | 11.0 | 27.9 | 16.0 | 40.6 | 19.0 | 48.3 | 8 | 2.4 | EB1020SS |
| 15 | 1.0 | 20 | 1.4 | 11.0 | 27.9 | 16.0 | 40.6 | 21.0 | 53.3 | 11 | 3.4 | |
| 20 | 1.4 | 20 | 1.4 | 12.0 | 30.5 | 17.0 | 43.2 | 22.0 | 55.9 | 12 | 3.7 | |
| 25 | 1.7 | 30 | 2.1 | 13.0 | 33.0 | 18.0 | 45.7 | 24.0 | 61.0 | 12 | 3.7 | |
| 30 | 2.1 | 40 | 2.8 | 13.0 | 33.0 | 19.0 | 48.3 | 24.0 | 61.0 | 14 | 4.3 | |
| 15 | 1.0 | 3 | 0.2 | 11.0 | 27.9 | 17.0 | 43.2 | 21.0 | 53.3 | 13 | 4.0 | EB1030SS |
| 25 | 1.7 | 10 | 0.7 | 12.0 | 30.5 | 18.0 | 45.7 | 23.0 | 58.4 | 16 | 4.9 | |
| 45 | 3.1 | 20 | 1.4 | 13.0 | 33.0 | 19.0 | 48.3 | 24.0 | 61.0 | 21 | 6.4 | |
| 60 | 4.1 | 30 | 2.1 | 14.0 | 35.6 | 18.0 | 45.7 | 24.0 | 61.0 | 26 | 7.9 | |
| 70 | 4.8 | 40 | 2.8 | 14.0 | 35.6 | 18.0 | 45.7 | 24.0 | 61.0 | 30 | 9.1 | |
| 30 | 2.1 | 5 | 0.3 | 13.0 | 33.0 | 19.0 | 48.3 | 24.0 | 61.0 | 17 | 5.2 | EB1040SS |
| 45 | 3.1 | 20 | 1.4 | 14.0 | 35.6 | 20.0 | 50.8 | 26.0 | 66.0 | 19 | 5.8 | |
| 65 | 4.5 | 20 | 1.4 | 15.0 | 38.1 | 21.0 | 53.3 | 27.0 | 68.6 | 23 | 7.0 | |
| 80 | 5.5 | 20 | 1.4 | 15.0 | 38.1 | 22.0 | 55.9 | 28.0 | 71.1 | 26 | 7.9 | |
| 90 | 6.2 | 40 | 2.8 | 16.0 | 40.6 | 22.0 | 55.9 | 28.0 | 71.1 | 26 | 7.9 | |

# Air Atomizing Spray Nozzles

## Siphon Fed Round Pattern - 1/4 NPT

KING awards 2011 WINNER

Plant Engineering PRODUCT of the YEAR Finalist 2011

**Model: SR1010SS**
**Material:** Type 303 Stainless Steel

**Model: SR1020SS**
**Material:** Type 303 Stainless Steel

**Model: SR1030SS**
**Material:** Type 303 Stainless Steel

**Model: SR1040SS**
**Material:** Type 303 Stainless Steel

### Model SR1010SS, SR1020SS, SR1030SS and SR1040SS

1/4 NPT siphon fed round pattern nozzles are great where no liquid pressure is available and a thin coating is needed at a specific area. Flow rate is adjustable via the adjusting valve. Siphon nozzles work best with a suction height of 36" (914mm) or less. Since these nozzles are siphon fed, the compressed airflow draws the liquid in and mixes it internally. Liquid flow is dependent both on the gravity or suction height and the airflow. Siphon fed round pattern nozzles provide the most liquid flow of any siphon fed nozzle.

**Siphon or gravity fed for non-pressurized applications.**



**The SR1020SS has a focused, round pattern for precision application of coatings or coolant.**

## Dimensions and Airflow Pattern

DOWNLOAD drawings at EXAIR.com

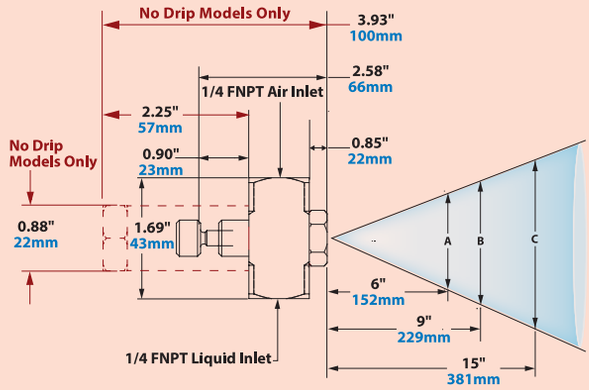


**No Drip Only Dimensions in Red**
See page 93 for No Drip Atomizing Nozzles

**Liquid Flow in GPH/LPH**

| Model | Air Pressure PSI/BAR | | Air SCFM/SLPM | | Gravity Head 18" | 46cm | 12" | 30cm | 6" | 15cm | Siphon Height 4" | 10cm | 8" | 20cm | 12" | 30cm | 24" | 61cm | 36" | 91cm |
|---|---|---|---|---|---|---|---|---|---|---|---|---|---|---|---|---|---|---|---|---|
| SR1010SS | 10 | 0.7 | 0.5 | 14.2 | 0.6 | 2.3 | 0.5 | 1.9 | 0.4 | 1.5 | 0.2 | 0.8 | 0.2 | 0.8 | --- | --- | --- | --- | --- | --- |
| | 20 | 1.4 | 0.7 | 19.8 | 0.6 | 2.3 | 0.6 | 2.3 | 0.5 | 1.9 | 0.4 | 1.5 | 0.4 | 1.5 | 0.3 | 1.1 | --- | --- | --- | --- |
| | 40 | 2.8 | 1.2 | 34.0 | 0.7 | 2.6 | 0.7 | 2.6 | 0.6 | 2.3 | 0.5 | 1.9 | 0.5 | 1.9 | 0.4 | 1.5 | 0.3 | 1.1 | 0.2 | 0.8 |
| | 60 | 4.1 | 1.6 | 45.3 | 0.8 | 3.0 | 0.8 | 3.0 | 0.7 | 2.6 | 0.6 | 2.3 | 0.5 | 1.9 | 0.5 | 1.9 | 0.4 | 1.5 | 0.2 | 0.8 |
| SR1010SS | 10 | 0.7 | 0.7 | 19.8 | 1.1 | 4.2 | 0.9 | 3.4 | 0.8 | 3.0 | 0.5 | 1.9 | 0.4 | 1.5 | 0.3 | 1.1 | --- | --- | --- | --- |
| | 20 | 1.4 | 1.1 | 31.1 | 1.3 | 4.9 | 1.1 | 4.2 | 1.0 | 3.8 | 0.8 | 3.0 | 0.7 | 2.6 | 0.6 | 2.3 | 0.3 | 1.1 | --- | --- |
| | 40 | 2.8 | 1.7 | 48.1 | 1.6 | 6.1 | 1.5 | 5.7 | 1.4 | 5.3 | 1.2 | 4.5 | 1.0 | 3.8 | 1.0 | 3.8 | 0.7 | 2.6 | 0.4 | 1.5 |
| | 60 | 4.1 | 2.3 | 65.0 | 1.9 | 7.2 | 1.7 | 6.4 | 1.6 | 6.1 | 1.4 | 5.3 | 1.2 | 4.5 | 1.2 | 4.5 | 0.9 | 3.4 | 0.5 | 1.9 |
| SR1030SS | 20 | 1.4 | 2.0 | 56.6 | 4.3 | 16.3 | 3.8 | 14.4 | 3.3 | 12.5 | 2.5 | 9.5 | 1.8 | 6.8 | 1.3 | 4.9 | 0.3 | 1.1 | --- | --- |
| | 40 | 2.8 | 3.2 | 90.6 | 5.0 | 18.9 | 4.4 | 16.7 | 4.0 | 15.1 | 3.3 | 12.5 | 2.9 | 11.0 | 2.5 | 9.5 | 1.3 | 4.9 | 1.0 | 3.8 |
| | 60 | 4.1 | 4.3 | 122 | 5.5 | 20.8 | 4.9 | 18.5 | 4.5 | 17.0 | 3.7 | 14.0 | 3.4 | 12.9 | 3.1 | 11.7 | 1.9 | 7.2 | 1.5 | 5.7 |
| | 80 | 5.5 | 5.6 | 158 | 5.8 | 22.0 | 5.3 | 20.1 | 4.9 | 18.5 | 4.1 | 15.5 | 3.9 | 14.8 | 3.7 | 14.0 | 2.6 | 9.8 | 1.7 | 6.4 |
| SR1040SS | 30 | 2.1 | 5.7 | 161 | 12.3 | 46.6 | 11.0 | 41.6 | 9.3 | 35.2 | 6.3 | 23.8 | 5.3 | 20.1 | 4.5 | 17.0 | 0.6 | 2.3 | --- | --- |
| | 40 | 2.8 | 6.9 | 195 | 13.0 | 49.2 | 11.8 | 44.7 | 10.0 | 37.9 | 7.3 | 27.6 | 6.5 | 24.6 | 5.5 | 20.8 | 1.5 | 5.7 | 0.3 | 1.1 |
| | 60 | 4.1 | 9.5 | 269 | 14.3 | 54.1 | 13.0 | 49.2 | 11.5 | 43.5 | 8.5 | 32.2 | 7.5 | 28.4 | 6.5 | 24.6 | 2.3 | 8.7 | 1.5 | 5.7 |
| | 80 | 5.5 | 12.0 | 340 | 15.0 | 56.8 | 13.5 | 51.1 | 12.5 | 47.3 | 9.5 | 36.0 | 8.5 | 32.2 | 7.5 | 28.4 | 3.5 | 13.2 | 1.9 | 7.2 |

**Spray Dimensions at 8" (20cm) Siphon Height**

| Air Pressure PSI/BAR | | Width A in | A cm | B in | B cm | C in | C cm | Max. Depth feet/m | | Model |
|---|---|---|---|---|---|---|---|---|---|---|
| 10 | 0.7 | 2.5 | 6 | 4.0 | 10 | 5.8 | 15 | 7 | 2.1 | SR1010SS |
| 20 | 1.4 | 3.3 | 8 | 4.3 | 11 | 6.0 | 15 | 9 | 2.7 | |
| 40 | 2.8 | 3.8 | 10 | 5.0 | 13 | 6.8 | 17 | 10 | 3.0 | |
| 60 | 4.1 | 3.8 | 10 | 5.0 | 13 | 6.8 | 17 | 11 | 3.4 | |
| 10 | 0.7 | 3.3 | 8 | 4.8 | 12 | 6.8 | 17 | 9 | 2.7 | SR1020SS |
| 20 | 1.4 | 3.5 | 9 | 5.0 | 13 | 7.0 | 18 | 11 | 3.4 | |
| 40 | 2.8 | 3.8 | 10 | 5.5 | 14 | 7.5 | 19 | 14 | 4.3 | |
| 60 | 4.1 | 4.0 | 10 | 5.8 | 15 | 8.0 | 20 | 16 | 4.9 | |
| 20 | 1.4 | 3.5 | 9 | 5.0 | 13 | 7.0 | 18 | 12 | 3.7 | SR1030SS |
| 40 | 2.8 | 3.8 | 10 | 5.3 | 13 | 7.5 | 19 | 13 | 4.0 | |
| 60 | 4.1 | 3.8 | 10 | 5.5 | 14 | 8.0 | 20 | 15 | 4.6 | |
| 80 | 5.5 | 4.0 | 10 | 5.8 | 15 | 8.3 | 21 | 18 | 5.5 | |
| 30 | 2.1 | 4.8 | 12 | 6.5 | 17 | 8.8 | 22 | 19 | 5.8 | SR1040SS |
| 40 | 2.8 | 5.2 | 13 | 7.0 | 18 | 9.3 | 24 | 21 | 6.4 | |
| 60 | 4.1 | 5.5 | 14 | 7.5 | 19 | 9.8 | 25 | 24 | 7.3 | |
| 80 | 5.5 | 5.8 | 15 | 7.8 | 20 | 10.0 | 25 | 27 | 8.2 | |

An INTELLIGENT COMPRESSED AIR® Product

KING awards 2011 WINNER

Plant Engineering PRODUCT of the YEAR Finalist 2011

## Siphon Fed Flat Fan Pattern - 1/4 NPT

**Model: SF1010SS**
**Material:** Type 303 Stainless Steel

**Model: SF1020SS**
**Material:** Type 303 Stainless Steel

**Model: SF1030SS**
**Material:** Type 303 Stainless Steel

### Model SF1010SS, SF1020SS and SF1030SS

1/4 NPT siphon fed flat fan pattern nozzles are great where no liquid pressure is available and a thin coating is needed over a wide band. Flow rate is adjustable via the adjusting valve. Siphon nozzles work best with a suction height of 36" (914mm) or less. Since these nozzles are siphon fed, the compressed airflow draws the liquid in and mixes it internally. Liquid flow is dependent both on the gravity or suction height and the airflow. Siphon fed flat fan pattern nozzles are the best choice where liquid is needed over a broad band such as a moving assembly line.

**Siphon or gravity fed for non-pressurized applications.**

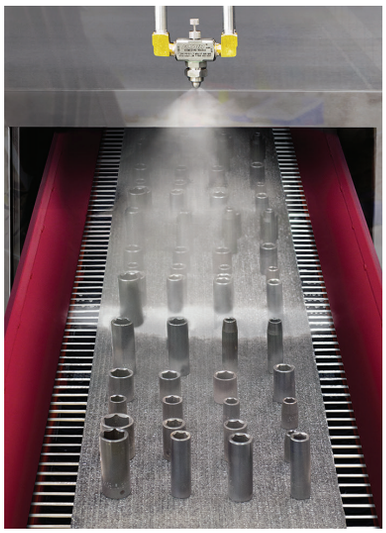

**A Model SF1020SS is used to apply a light coating of oil to prevent sockets from rusting prior to a packaging operation.**

## Dimensions and Airflow Pattern

DOWNLOAD drawings at EXAIR.com

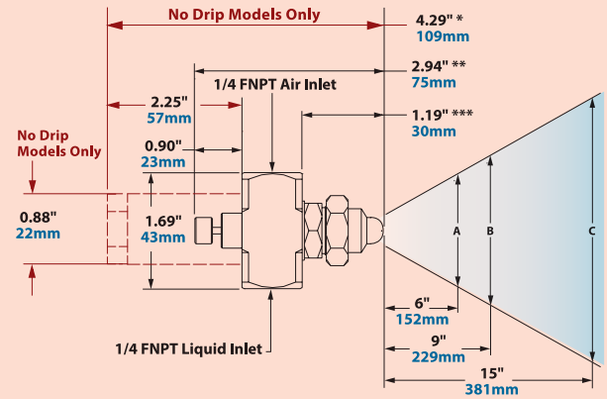


*Model SF2010SS: 4.15" / 105mm
**Model SF1010SS: 2.80" / 71mm
***Model SF1010SS: 1.05" / 27mm

**No Drip Only Dimensions in Red**
See page 93 for No Drip Atomizing Nozzles



**Liquid Flow in GPH/LPH**

| Model | Air Pressure PSI | Air Pressure BAR | Air SCFM | Air SLPM | Gravity Head 18" | 46cm | 12" | 30cm | 6" | 15cm | Siphon Height 4" | 10cm | 8" | 20cm | 12" | 30cm | 24" | 61cm | 36" | 91cm |
|---|---|---|---|---|---|---|---|---|---|---|---|---|---|---|---|---|---|---|---|---|
| SF1010SS | 10 | 0.7 | 0.9 | 25.5 | 0.4 | 1.5 | 0.3 | 1.1 | 0.3 | 1.1 | 0.2 | 0.8 | 0.2 | 0.8 | 0.2 | 0.8 | 0.2 | 0.8 | 0.1 | 0.4 |
| | 20 | 1.4 | 1.3 | 36.8 | 0.4 | 1.5 | 0.3 | 1.1 | 0.3 | 1.1 | 0.3 | 1.1 | 0.3 | 1.1 | 0.3 | 1.1 | 0.2 | 0.8 | 0.2 | 0.8 |
| | 30 | 2.1 | 1.7 | 48.1 | 0.3 | 1.1 | 0.3 | 1.1 | 0.3 | 1.1 | 0.3 | 1.1 | 0.3 | 1.1 | --- | --- | --- | --- | --- | --- |
| SF1020SS | 20 | 1.4 | 2.3 | 65.1 | 1.2 | 4.5 | 1.1 | 4.2 | 1.0 | 3.8 | 0.9 | 3.4 | 0.8 | 3.0 | 0.8 | 3.0 | 0.6 | 2.3 | 0.5 | 1.9 |
| | 30 | 2.1 | 2.9 | 82.1 | 1.1 | 4.2 | 1.1 | 4.2 | 1.0 | 3.8 | 0.8 | 3.0 | 0.8 | 3.0 | 0.8 | 3.0 | 0.6 | 2.3 | 0.5 | 1.9 |
| | 40 | 2.8 | 3.5 | 99.1 | 1.0 | 3.8 | 0.9 | 3.4 | 0.8 | 3.0 | 0.7 | 2.6 | 0.7 | 2.6 | 0.7 | 2.6 | 0.5 | 1.9 | 0.4 | 1.5 |
| | 50 | 3.4 | 4.3 | 122 | 0.8 | 3.0 | 0.7 | 2.6 | 0.5 | 1.9 | 0.5 | 1.9 | 0.4 | 1.5 | 0.3 | 1.1 | --- | --- | --- | --- |
| SF1030SS | 20 | 1.4 | 2.2 | 62.3 | 1.8 | 6.8 | 1.6 | 6.1 | 1.5 | 5.7 | 1.4 | 5.3 | 1.4 | 5.3 | 1.3 | 4.9 | 1.1 | 4.2 | 1.0 | 3.8 |
| | 30 | 2.1 | 2.8 | 79.2 | 1.9 | 7.2 | 1.8 | 6.8 | 1.8 | 6.8 | 1.7 | 6.4 | 1.7 | 6.4 | 1.6 | 6.1 | 1.4 | 5.3 | 1.2 | 4.5 |
| | 40 | 2.8 | 3.3 | 93.4 | 1.8 | 6.8 | 1.8 | 6.8 | 1.7 | 6.4 | 1.6 | 6.1 | 1.6 | 6.1 | 1.5 | 5.7 | 1.3 | 4.9 | 1.2 | 4.5 |
| | 50 | 3.4 | 4.0 | 113 | 1.6 | 6.1 | 1.5 | 5.7 | 1.4 | 5.3 | 1.4 | 5.3 | 1.3 | 4.9 | 1.3 | 4.9 | 1.1 | 4.2 | 1.0 | 3.8 |

**Spray Dimensions at 8" (20cm) Siphon Height**

| Model | Air Pressure PSI | Air Pressure BAR | Width A in | A cm | B in | B cm | C in | C cm | Max. Depth feet | Max. Depth m |
|---|---|---|---|---|---|---|---|---|---|---|
| SF1010SS | 10 | 0.7 | 9 | 23 | 11 | 28 | 13 | 33 | 5 | 1.5 |
| | 20 | 1.4 | 10 | 25 | 12 | 30 | 14 | 36 | 6 | 1.8 |
| | 30 | 2.1 | 11 | 28 | 13 | 33 | 15 | 38 | 7 | 2.1 |
| SF1020SS | 20 | 1.4 | 10 | 25 | 14 | 36 | 19 | 48 | 6 | 1.8 |
| | 30 | 2.1 | 11 | 28 | 15 | 38 | 21 | 53 | 7 | 2.1 |
| | 40 | 2.8 | 13 | 33 | 16 | 41 | 23 | 58 | 6 | 1.8 |
| | 50 | 3.4 | 14 | 36 | 18 | 46 | 25 | 64 | 6 | 1.8 |
| SF1030SS | 20 | 1.4 | 9 | 23 | 11 | 28 | 15 | 38 | 8 | 2.4 |
| | 30 | 2.1 | 10 | 25 | 13 | 33 | 17 | 43 | 9 | 2.7 |
| | 40 | 2.8 | 11 | 28 | 14 | 36 | 17 | 43 | 10 | 3.0 |
| | 50 | 3.4 | 11 | 28 | 14 | 36 | 18 | 46 | 11 | 3.4 |

# Air Atomizing Spray Nozzles

## Internal Mix Narrow Angle Round Pattern - 1/2 NPT

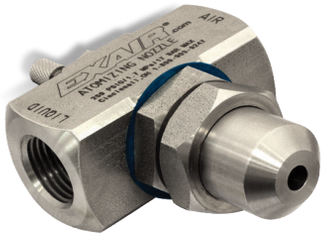

**Model: AN5010SS**
**Material:** Type 303 Stainless Steel

**Model: AN5020SS**
**Material:** Type 303 Stainless Steel

### Model AN5010SS and AN5020SS

1/2 NPT internal mix narrow angle round pattern nozzles are excellent for spraying a concentrated mist of liquid. Because of the versatility of their adjustments, these larger atomizing nozzles can apply a heavy coat up close or send a very fine mist over 40 feet away! They are often used for higher volume application of lubricants during assembly, or marking items as they move through an assembly line.

**For pressure fed applications not requiring independent air and liquid control.**

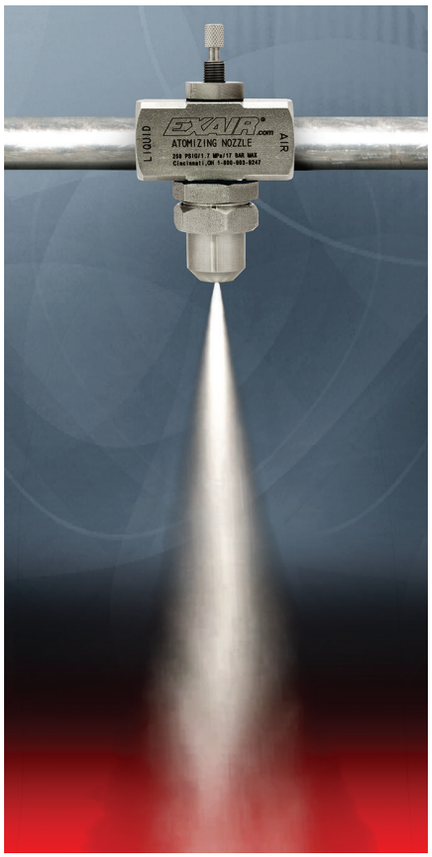

**With adjustable liquid flow, these nozzles can be used to apply a heavy coat or a precise volume of liquid.**

## Dimensions and Airflow Pattern

DOWNLOAD drawings at EXAIR.com

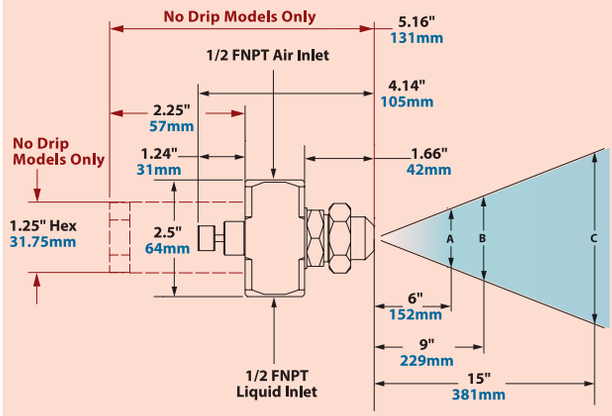


**No Drip Only Dimensions in Red**
See page 93 for No Drip Atomizing Nozzles

**Spray Dimensions**

| Model | Pressure: Air PSI/BAR | | Pressure: Liquid PSI/BAR | | Width A in | Width A cm | Width B in | Width B cm | Width C in | Width C cm | Max. Depth feet/m | | Model |
|---|---|---|---|---|---|---|---|---|---|---|---|---|---|
| AN5010SS | 20 | 1.4 | 5 | 0.3 | 3.5 | 9 | 5.75 | 14.6 | 8.5 | 22 | 22 | 6.7 | AN5010SS |
| | 36 | 2.5 | 15 | 1.0 | | | | | | | 30 | 9.1 | |
| | 50 | 3.4 | 25 | 1.7 | | | | | | | 34 | 10.4 | |
| | 60 | 4.1 | 35 | 2.4 | | | | | | | 37 | 11.3 | |
| AN5020SS | 10 | 0.7 | 5 | 0.3 | 4 | 10 | 6 | 15.2 | 8.5 | 22 | 20 | 6.1 | AN5020SS |
| | 32 | 2.2 | 25 | 1.7 | 5.5 | 14 | 7.5 | 19.1 | 10 | 25 | 27 | 8.2 | |
| | 44 | 3.0 | 35 | 2.4 | 6 | 15 | 9 | 22.9 | 10.5 | 27 | 35 | 10.7 | |
| | 64 | 4.4 | 55 | 3.8 | 6 | 15 | 9 | 22.9 | 10.5 | 27 | 42 | 12.8 | |

| Model | 5 PSI/0.3 BAR Liquid: Air Pressure PSI/BAR | | GPH/LPH | | SCFM/SLPM | | 15 PSI/1.0 BAR Liquid: Air Pressure PSI/BAR | | GPH/LPH | | SCFM/SLPM | | 25 PSI/1.7 BAR Liquid: Air Pressure PSI/BAR | | GPH/LPH | | SCFM/SLPM | | 35 PSI/2.4 BAR Liquid: Air Pressure PSI/BAR | | GPH/LPH | | SCFM/SLPM | | 55 PSI/3.8 BAR Liquid: Air Pressure PSI/BAR | | GPH/LPH | | SCFM/SLPM | | Model |
|---|---|---|---|---|---|---|---|---|---|---|---|---|---|---|---|---|---|---|---|---|---|---|---|---|---|---|---|---|---|---|---|
| AN5010SS | 18 | 1.2 | 9 | 34.1 | 12 | 339.8 | 28 | 1.9 | 27 | 102.2 | 14.5 | 411 | 38 | 2.6 | 51.6 | 195.3 | 16.4 | 464 | 48 | 3.3 | 75.6 | 286 | 18.4 | 521 | --- | --- | --- | --- | --- | --- | AN5010SS |
| | 20 | 1.4 | 7 | 26.5 | 12.8 | 362.5 | 32 | 2.2 | 20 | 75.7 | 16.2 | 459 | 44 | 3.0 | 32.4 | 122.6 | 19.5 | 552 | 60 | 4.1 | 36.6 | 139 | 25.3 | 716 | --- | --- | --- | --- | --- | --- | |
| | 22 | 1.5 | 6 | 22.7 | 13.6 | 385.2 | 38 | 2.6 | 20 | 75.7 | 19 | 538 | 54 | 3.7 | 22 | 83.3 | 24.3 | 688 | 72 | 5.0 | 21.6 | 82 | 31.0 | 878 | --- | --- | --- | --- | --- | --- | |
| | 24 | 1.7 | 4.5 | 17.0 | 14.5 | 410.6 | 42 | 2.9 | 12.5 | 47.3 | 20.4 | 578 | 60 | 4.1 | 18 | 68.1 | 26.9 | 762 | 78 | 5.4 | 16.8 | 64 | 33.7 | 954 | --- | --- | --- | --- | --- | --- | |
| AN5020SS | 10 | 0.7 | 30 | 113.6 | 13.7 | 388.0 | 18 | 1.2 | 98.4 | 372.4 | 15.6 | 442 | 26 | 1.8 | 159 | 601.8 | 17.6 | 498 | 36 | 2.5 | 183 | 693 | 20.0 | 566 | 54 | 3.7 | 231 | 874.3 | 26.0 | 736 | AN5020SS |
| | 12 | 0.8 | 18.6 | 70.4 | 16.2 | 458.8 | 20 | 1.4 | 73.2 | 277.1 | 17.9 | 507 | 32 | 2.2 | 99 | 374.7 | 23.7 | 671 | 42 | 2.9 | 126 | 477 | 26.1 | 739 | 60 | 4.1 | 168 | 635.9 | 33.4 | 946 | |
| | --- | --- | --- | --- | --- | --- | 22 | 1.5 | 63.6 | 240.7 | 20.3 | 575 | 36 | 2.5 | 75 | 283.9 | 28.6 | 810 | 46 | 3.2 | 96 | 363 | 31.0 | 878 | 72 | 5.0 | 76 | 287.7 | 47.2 | 1337 | |
| | --- | --- | --- | --- | --- | --- | 24 | 1.7 | 52.8 | 199.8 | 22.6 | 640 | 40 | 2.8 | 57.6 | 218.0 | 33.0 | 935 | 52 | 3.6 | 71 | 269 | 37.7 | 1068 | 76 | 5.2 | 54 | 204.4 | 51.3 | 1453 | |

An INTELLIGENT COMPRESSED AIR® Product

## Internal Mix Wide Angle Round Pattern - 1/2 NPT

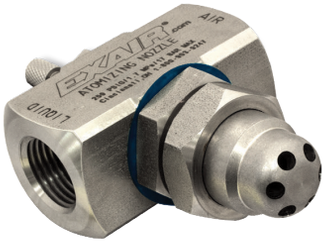

**Model: AW5010SS**
**Material:** Type 303 Stainless Steel

**Model: AW5020SS**
**Material:** Type 303 Stainless Steel

**Model: AW5030SS**
**Material:** Type 303 Stainless Steel

### Model AW5010SS, AW5020SS and AW5030SS

EXAIR's 1/2 NPT internal mix wide angle round pattern atomizing nozzles are great for covering a broad area. These larger atomizing nozzles can be adjusted for a light mist or a heavy soaking spray. They are popular for dust mitigation, humidification, and cooling of products, people or livestock in a broad area. These nozzles are also perfect for applying a coating to parts packed in large containers, for example, misting a container of stamped steel parts with oil to prevent oxidation during shipment.

**For pressure fed applications not requiring independent air and liquid control.**

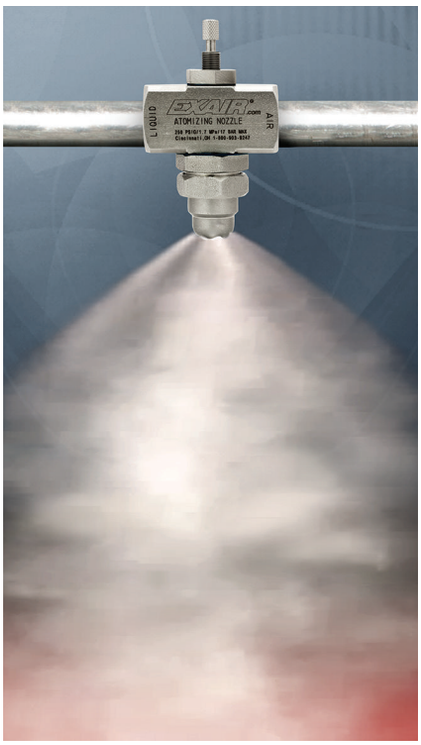

**Produce a large volume, fine mist or a hard hitting spray with these adjustable liquid nozzles.**

### Dimensions and Airflow Pattern

DOWNLOAD drawings at EXAIR.com

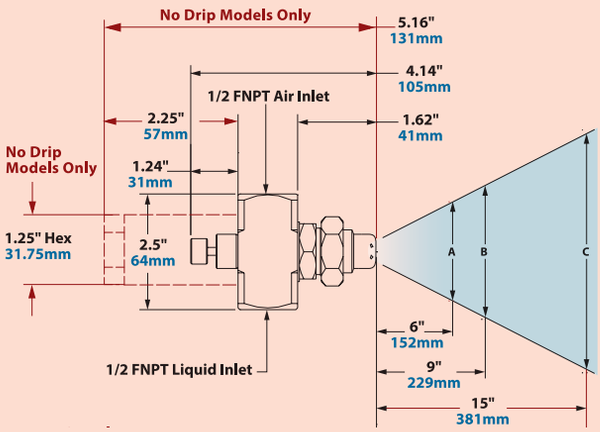


**No Drip Only Dimensions in Red**
See page 93 for No Drip Atomizing Nozzles

| Model | 5 PSI/0.3 BAR Liquid | | | | | | 15 PSI/1.0 BAR Liquid | | | | | | 25 PSI/1.7 BAR Liquid | | | | | | 35 PSI/2.4 BAR Liquid | | | | | | 55 PSI/3.8 BAR Liquid | | | | | | Spray Dimensions | | | | | | | | | | | | | | |
|---|---|---|---|---|---|---|---|---|---|---|---|---|---|---|---|---|---|---|---|---|---|---|---|---|---|---|---|---|---|---|---|---|---|---|---|---|---|---|---|---|---|---|---|---|---|
| | Air Pressure PSI/BAR | | GPH/ LPH | | SCFM/ SLPM | | Air Pressure PSI/BAR | | GPH/ LPH | | SCFM/ SLPM | | Air Pressure PSI/BAR | | GPH/ LPH | | SCFM/ SLPM | | Air Pressure PSI/BAR | | GPH/ LPH | | SCFM/ SLPM | | Air Pressure PSI/BAR | | GPH/ LPH | | SCFM/ SLPM | | Pressure: Air PSI/ BAR | | Pressure: Liquid PSI/ BAR | | Width A in | Width A cm | Width B in | Width B cm | Width C in | Width C cm | Max. Depth feet/m | | |
| AW5010SS | --- | --- | --- | --- | --- | --- | --- | --- | --- | --- | --- | --- | 28 | 1.9 | 33 | 125 | 7.6 | 215 | 40 | 2.8 | 28.8 | 109 | 11.0 | 312 | 58 | 4.0 | 66 | 250 | 11.7 | 331 | 30 | 2.1 | 25 | 1.7 | 12.5 | 31.8 | 18 | 46 | 26 | 66 | 18 | 5.5 | AW5010SS |
| | --- | --- | --- | --- | --- | --- | --- | --- | --- | --- | --- | --- | 30 | 2.1 | 20.4 | 77 | 10.0 | 283 | 42 | 2.9 | 18 | 68 | 13.3 | 377 | 60 | 4.1 | 49 | 185 | 13.4 | 379 | 40 | 2.8 | 35 | 2.4 | 13 | 33.0 | 19 | 48 | 26 | 66 | 20 | 6.1 | |
| | --- | --- | --- | --- | --- | --- | --- | --- | --- | --- | --- | --- | --- | --- | --- | --- | --- | --- | --- | --- | --- | --- | --- | --- | 62 | 4.3 | 36 | 136 | 16.8 | 476 | 60 | 4.1 | 55 | 3.8 | 14 | 35.6 | 19 | 48 | 26.5 | 67 | 22 | 6.7 | |
| AW5020SS | 10 | 0.69 | 32 | 121 | 12.0 | 340 | 26 | 1.8 | 36.8 | 139 | 21.8 | 617 | 40 | 2.8 | 60.6 | 229 | 29.9 | 847 | 54 | 3.7 | 70 | 265 | 37.4 | 1059 | 75 | 5.2 | 115 | 435 | 45.6 | 1291 | 12 | 0.8 | 5 | 0.3 | 15 | 38.1 | 19.5 | 50 | 25 | 64 | 22 | 6.7 | AW5020SS |
| | 12 | 0.83 | 20.4 | 77 | 14.5 | 411 | 30 | 2.1 | 28.8 | 109 | 25.6 | 725 | 44 | 3.0 | 40.8 | 154 | 33.5 | 949 | 58 | 4.0 | 49.2 | 186 | 41.2 | 1167 | 80 | 5.5 | 94 | 356 | 50.2 | 1422 | 46 | 3.2 | 25 | 1.7 | 16 | 40.6 | 20 | 51 | 25 | 64 | 35 | 10.7 | |
| | 14 | 0.97 | 13.2 | 50 | 16.2 | 459 | 32 | 2.2 | 21 | 79 | 27.7 | 784 | 48 | 3.3 | 26.4 | 100 | 38.2 | 1082 | 62 | 4.3 | 36 | 136 | 44.7 | 1266 | --- | --- | --- | --- | --- | --- | 60 | 4.1 | 35 | 2.4 | 15 | 38.1 | 18 | 46 | 22 | 56 | 40 | 12.2 | |
| | --- | --- | --- | --- | --- | --- | 34 | 2.3 | 15.6 | 59 | 29.6 | 838 | 50 | 3.4 | 20.4 | 77 | 39.1 | 1107 | 65 | 4.5 | 27 | 102 | 46.9 | 1328 | --- | --- | --- | --- | --- | --- | 80 | 5.5 | 55 | 3.8 | 13 | 33.0 | 17 | 43 | 20.5 | 52 | 45 | 13.7 | |
| AW5030SS | 10 | 0.69 | 31.2 | 118 | 12.8 | 362 | 18 | 1.2 | 112 | 424 | 14.6 | 413 | 26 | 1.8 | 180 | 681 | 17.0 | 481 | 36 | 2.5 | 210 | 795 | 21.2 | 600 | 54 | 3.7 | 264 | 999 | 28.2 | 799 | 10 | 0.7 | 5 | 0.3 | 16 | 40.6 | 21 | 53 | 31 | 79 | 20 | 6.1 | AW5030SS |
| | 12 | 0.83 | 18.6 | 70 | 15.15 | 429 | 20 | 1.4 | 87 | 329 | 16.5 | 467 | 30 | 2.1 | 138 | 522 | 20.6 | 583 | 40 | 2.8 | 177 | 670 | 25.0 | 708 | 62 | 4.3 | 216 | 818 | 36.0 | 1020 | 20 | 1.4 | 15 | 1.0 | 16 | 40.6 | 20.5 | 52 | 27 | 69 | 22 | 6.7 | |
| | --- | --- | --- | --- | --- | --- | 22 | 1.5 | 72 | 273 | 18.5 | 524 | 36 | 2.5 | 83.4 | 316 | 26.7 | 756 | 48 | 3.3 | 102 | 386 | 32.5 | 920 | 70 | 4.8 | 150 | 568 | 42.4 | 1201 | 44 | 3.0 | 35 | 2.4 | 13 | 33.0 | 17 | 43 | 22 | 56 | 35 | 10.7 | |
| | --- | --- | --- | --- | --- | --- | 24 | 1.7 | 60 | 227 | 20.4 | 578 | 40 | 2.8 | 61.2 | 232 | 31.0 | 878 | 52 | 3.6 | 82.2 | 311 | 36.7 | 1039 | 76 | 5.2 | 111 | 420 | 48.1 | 1362 | 64 | 4.4 | 55 | 3.8 | 13.5 | 34.3 | 17 | 43 | 22 | 56 | 44 | 13.4 | |

# Air Atomizing Spray Nozzles

## Internal Mix Flat Fan Pattern - 1/2 NPT

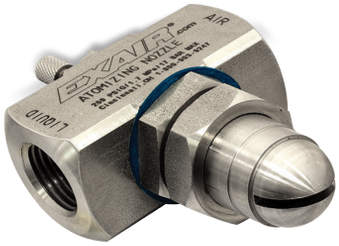

**Model: AF5010SS**
**Material:** Type 303 Stainless Steel

**Model: AF5020SS**
**Material:** Type 303 Stainless Steel

### Model AF5010SS and AF5020SS

1/2 NPT internal mix flat fan pattern atomizing nozzles are designed with efficiency in mind. Especially good for vertical or horizontal assembly lines, the broad thin pattern of these larger atomizing nozzles makes efficient use of your expensive liquids. Their output can be adjusted for a very light film or a heavy coat of atomized liquid. Whether it's applying paint to hanging sheet metal, or using a water mist to cool a laminate web, flat fan atomizing nozzles cover a wide flat area, ideal for products moving on a conveyor.

**For pressure fed applications not requiring independent air and liquid control.**

**Use the adjustable liquid valve to apply just the right amount of liquid for your application.**

## Dimensions and Airflow Pattern

DOWNLOAD drawings at EXAIR.com

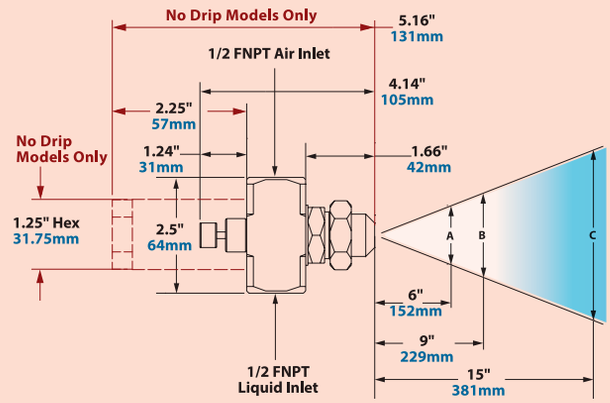


**No Drip Only Dimensions in Red**
See page 93 for No Drip Atomizing Nozzles

## Need Help Choosing The Best Atomizing Nozzle For Your Application?

Not sure which atomizing nozzle is required?
Our Application Engineers can assist you in determining the correct model.
Call **1-800-903-9247** to speak with an Application Engineer.

**Spray Dimensions**

| Model | Pressure: Air PSI/BAR | | Pressure: Liquid PSI/BAR | | Width A in | Width A cm | Width B in | Width B cm | Width C in | Width C cm | Max. Depth feet/m | | Model |
|---|---|---|---|---|---|---|---|---|---|---|---|---|---|
| AF5010SS | 20 | 1.4 | 10 | 0.7 | 25 | 64 | 34 | 86 | 45 | 114 | 14 | 4.3 | AF5010SS |
| | 40 | 2.8 | 20 | 1.4 | 28 | 71 | 36 | 91 | 46 | 117 | 18 | 5.5 | |
| | 50 | 3.4 | 25 | 1.7 | 29 | 74 | 38 | 97 | 48 | 122 | 22 | 6.7 | |
| | 70 | 4.8 | 40 | 2.8 | 32 | 81 | 42 | 107 | 51 | 130 | 27 | 8.2 | |
| AF5020SS | 10 | 0.7 | 5 | 0.3 | 21 | 53 | 27 | 69 | 36 | 91 | 13 | 4.0 | AF5020SS |
| | 20 | 1.4 | 15 | 1.0 | 34 | 86 | 42 | 107 | 52 | 132 | 15 | 4.6 | |
| | 44 | 3.0 | 35 | 2.4 | 39 | 99 | 47 | 119 | 64 | 163 | 19 | 5.8 | |
| | 64 | 4.4 | 55 | 3.8 | 40 | 102 | 50 | 127 | 68 | 173 | 20 | 6.1 | |

| Model | 5 PSI/0.3 BAR Liquid: Air Pressure PSI/BAR | | GPH/LPH | | SCFM/SLPM | | 15 PSI/1.0 BAR Liquid: Air Pressure PSI/BAR | | GPH/LPH | | SCFM/SLPM | | 25 PSI/1.7 BAR Liquid: Air Pressure PSI/BAR | | GPH/LPH | | SCFM/SLPM | | 35 PSI/2.4 BAR Liquid: Air Pressure PSI/BAR | | GPH/LPH | | SCFM/SLPM | | 55 PSI/3.8 BAR Liquid: Air Pressure PSI/BAR | | GPH/LPH | | SCFM/SLPM | | Model |
|---|---|---|---|---|---|---|---|---|---|---|---|---|---|---|---|---|---|---|---|---|---|---|---|---|---|---|---|---|---|---|---|
| AF5010SS | --- | --- | --- | --- | --- | --- | 28 | 1.9 | 33.6 | 127 | 23.4 | 663 | 44 | 3.0 | 38.4 | 145 | 32.4 | 918 | 58 | 4.0 | 46.2 | 175 | 40.3 | 1141 | --- | --- | --- | --- | --- | --- | AF5010SS |
| | --- | --- | --- | --- | --- | --- | 30 | 2.1 | 25.2 | 95 | 25.3 | 716 | 48 | 3.3 | 35.8 | 136 | 36.2 | 1025 | 62 | 4.3 | 34.8 | 132 | 43.5 | 1232 | --- | --- | --- | --- | --- | --- | |
| | --- | --- | --- | --- | --- | --- | 34 | 2.3 | 12.6 | 48 | 28.7 | 813 | 50 | 3.4 | 18 | 68 | 38.0 | 1076 | 65 | 4.5 | 25.2 | 95 | 46.0 | 1303 | --- | --- | --- | --- | --- | --- | |
| | --- | --- | --- | --- | --- | --- | 36 | 2.5 | 11.5 | 44 | 31.2 | 884 | 60 | 4.1 | 3.5 | 13 | 46.0 | 1303 | 70 | 4.8 | 16.2 | 61 | 49.7 | 1408 | --- | --- | --- | --- | --- | --- | |
| AF5020SS | 10 | 0.69 | 18 | 68 | 18.0 | 510 | 18 | 1.2 | 87.6 | 332 | 15.6 | 442 | 26 | 1.8 | 150 | 568 | 17.9 | 507 | 36 | 2.5 | 177 | 670 | 22.3 | 632 | 54 | 3.7 | 231 | 874 | 29.3 | 830 | AF5020SS |
| | 12 | 0.83 | 6 | 23 | 6.0 | 170 | 20 | 1.4 | 62.4 | 236 | 18.4 | 521 | 30 | 2.1 | 99 | 375 | 22.3 | 632 | 40 | 2.8 | 132 | 500 | 26.6 | 753 | 60 | 4.1 | 186 | 704 | 35.6 | 1008 | |
| | --- | --- | --- | --- | --- | --- | 22 | 1.5 | 45.6 | 173 | 20.6 | 583 | 36 | 2.5 | 50.4 | 191 | 29.9 | 847 | 46 | 3.2 | 76.8 | 291 | 34.4 | 974 | 68 | 4.7 | 108 | 409 | 44.4 | 1257 | |
| | --- | --- | --- | --- | --- | --- | 24 | 1.7 | 30.6 | 116 | 23.3 | 660 | 40 | 2.8 | 26.4 | 100 | 35.2 | 997 | 52 | 3.6 | 38.4 | 145 | 41.5 | 1175 | 76 | 5.2 | 66 | 250 | 53.13 | 1505 | |

An INTELLIGENT COMPRESSED AIR® Product

2018 Plant Engineering PRODUCT of the YEAR Bronze Award

## Internal Mix 360° Hollow Circular Pattern - 1/2 NPT

**Model: AT5010SS**
**Material:** Type 303 Stainless Steel

### Model AT5010SS

1/2 NPT internal mix 360° nozzles are designed for applications where the spray pattern must be oriented away from the nozzle in all directions. These larger 360° nozzles are ideal where a smooth, even coating is needed on the ID of pipe or similar ductwork. They also work great for operations where a mist over a broad area is needed, such as dust suppression, humidification and cooling.

**For pressure fed applications not requiring independent air and liquid control.**

### Dimensions and Airflow Pattern

DOWNLOAD drawings at EXAIR.com

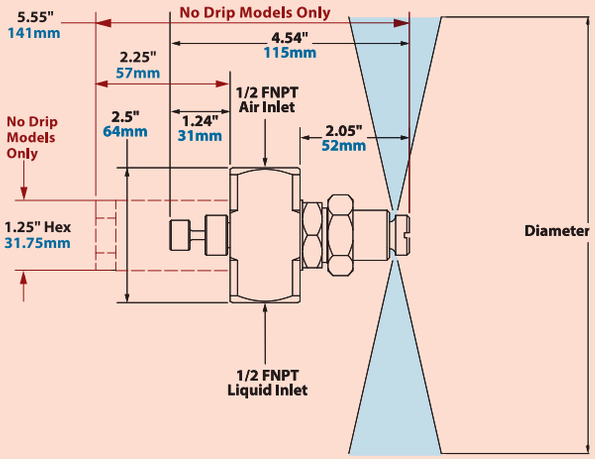


**No Drip Only Dimensions in Red**
See page 93 for No Drip Atomizing Nozzles



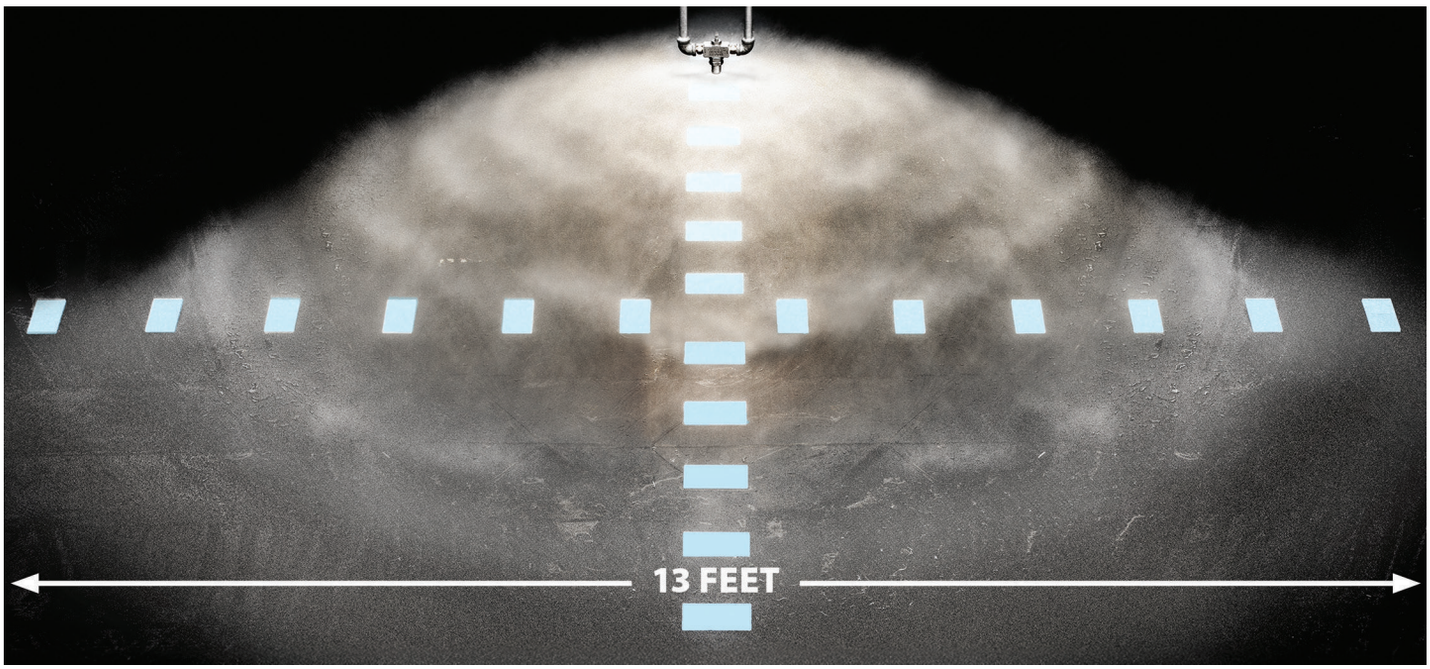


**360° circular pattern nozzles can be used to coat inside diameters or cover a broad area up to 13' (4m).**

| Model | 10 PSI/0.7 BAR Liquid | | | | | | 20 PSI/1.4 BAR Liquid | | | | | | 30 PSI/2.1 BAR Liquid | | | | | | 40 PSI/2.8 BAR Liquid | | | | | | 60 PSI/4.1 BAR Liquid | | | | | | Spray Dimensions | | | | | | Model |
|---|---|---|---|---|---|---|---|---|---|---|---|---|---|---|---|---|---|---|---|---|---|---|---|---|---|---|---|---|---|---|---|---|---|---|---|---|---|
| | Air Pressure PSI/BAR | | GPH/LPH | | SCFM/SLPM | | Air Pressure PSI/BAR | | GPH/LPH | | SCFM/SLPM | | Air Pressure PSI/BAR | | GPH/LPH | | SCFM/SLPM | | Air Pressure PSI/BAR | | GPH/LPH | | SCFM/SLPM | | Air Pressure PSI/BAR | | GPH/LPH | | SCFM/SLPM | | Pressure: Air PSI/BAR | | Pressure: Liquid PSI/BAR | | Diameter: in | Diameter: cm | |
| AT5010SS | 14 | 1.0 | 54 | 204 | 13.7 | 388 | 24 | 1.7 | 100 | 379 | 17.3 | 490 | 36 | 2.5 | 114 | 431 | 23.7 | 671 | 48 | 3.3 | 132 | 500 | 29.6 | 838 | 72 | 5.0 | 150 | 568 | 41.5 | 1175 | 16 | 1.1 | 10 | 0.7 | 56 | 142 | AT5010SS |
| | 16 | 1.1 | 33.6 | 127 | 16.3 | 462 | 28 | 1.9 | 66 | 250 | 21.8 | 617 | 40 | 2.8 | 83 | 314 | 28.0 | 793 | 54 | 3.7 | 85 | 322 | 36.2 | 1025 | 76 | 5.2 | 120 | 454 | 45.6 | 1291 | 42 | 2.9 | 30 | 2.1 | 112 | 284 | |
| | 18 | 1.2 | 16.8 | 64 | 18.5 | 524 | 32 | 2.2 | 32.5 | 123 | 26.7 | 756 | 46 | 3.2 | 38.4 | 145 | 34.6 | 980 | 60 | 4.1 | 42 | 159 | 42.7 | 1209 | 78 | 5.4 | 108 | 409 | 47.9 | 1357 | 56 | 3.9 | 40 | 2.8 | 144 | 366 | |
| | 20 | 1.4 | 10.8 | 41 | 20.0 | 566 | 36 | 2.5 | 12 | 45 | 30.8 | 872 | 50 | 3.4 | 14.4 | 55 | 39.1 | 1107 | 66 | 4.6 | 15.6 | 59 | 49.9 | 1413 | 82 | 5.7 | 84 | 318 | 51.5 | 1458 | 80 | 5.5 | 60 | 4.1 | 156 | 396 | |

# Air Atomizing Spray Nozzles

## External Mix Narrow Angle Flat Fan Pattern - 1/2 NPT

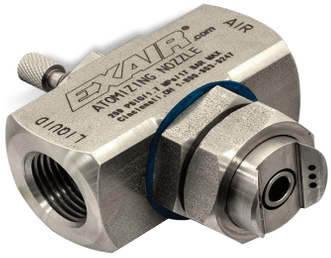

**Model: EF5010SS**
**Material:** Type 303 Stainless Steel

### Model EF5010SS

1/2 NPT external mix narrow angle flat fan pattern nozzles are great where a high volume of liquid is needed over a concentrated area. Since they are external mix, airflow and liquid flow can be controlled independently. External mix narrow angle flat fan pattern nozzles are the best choice where thicker liquids for a heavy coating are needed over a narrow band, such as a paint line.

**For pressure fed applications with independent air and liquid control.**

### Dimensions and Airflow Pattern

DOWNLOAD drawings at EXAIR.com

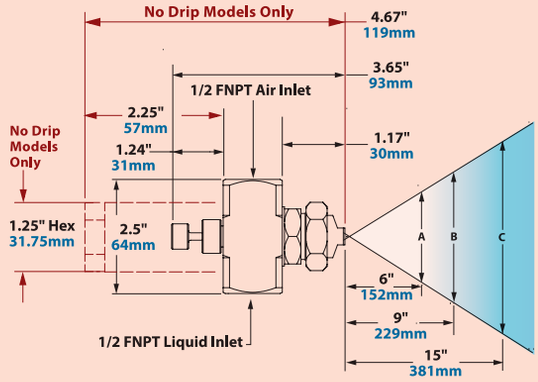


**No Drip Only Dimensions in Red**
See page 93 for No Drip Atomizing Nozzles

TECHELP 1-800-903-9247 DIRECT

Built to Last 5 yr. WARRANTY
See our Terms & Conditions

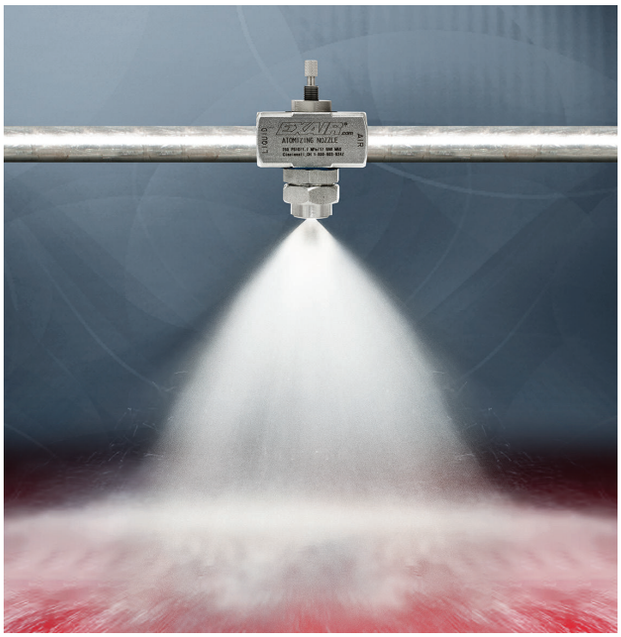

**External mix narrow angle flat fan nozzles provide a high volume of liquid in a concentrated area.**

| Model | 3 PSI/0.2 BAR Liquid | | | | | | 5 PSI/0.3 BAR Liquid | | | | | | 7 PSI/0.5 BAR Liquid | | | | | | 10 PSI/0.7 BAR Liquid | | | | | | 15 PSI/1.0 BAR Liquid | | | | | | Spray Dimensions | | | | | | | | | | | | |
|---|---|---|---|---|---|---|---|---|---|---|---|---|---|---|---|---|---|---|---|---|---|---|---|---|---|---|---|---|---|---|---|---|---|---|---|---|---|---|---|---|---|---|---|
| | Air Pressure PSI/ BAR | | GPH/ LPH | | SCFM/ SLPM | | Air Pressure PSI/ BAR | | GPH/ LPH | | SCFM/ SLPM | | Air Pressure PSI/ BAR | | GPH/ LPH | | SCFM/ SLPM | | Air Pressure PSI/ BAR | | GPH/ LPH | | SCFM/ SLPM | | Air Pressure PSI/ BAR | | GPH/ LPH | | SCFM/ SLPM | | Pressure | | | | Width | | | | | | Max. Depth feet/m | | |
| | | | | | | | | | | | | | | | | | | | | | | | | | | | | | | | Air PSI/ BAR | | Liquid PSI/ BAR | | A | | B | | C | | | | |
| | | | | | | | | | | | | | | | | | | | | | | | | | | | | | | | | | | | in | cm | in | cm | in | cm | | | |
| EF5010SS | 30 | 2.1 | 141 | 534 | 30.2 | 854 | 40 | 2.8 | 186 | 704 | 36.6 | 1037 | 45 | 3.1 | 218 | 825 | 39.9 | 1130 | 55 | 3.8 | 264 | 999 | 46.4 | 1314 | 80 | 5.5 | 303 | 1147 | 56.0 | 1586 | 35 | 2.4 | 3 | 0.2 | 15 | 38 | 18.5 | 47 | 22 | 56 | 25 | 7.6 | EF5010SS |
| | 35 | 2.4 | | | 34.0 | 961 | 45 | 3.1 | | | 40.4 | 1144 | 55 | 3.8 | | | 47.0 | 1331 | 60 | 4.1 | | | 49.75 | 1409 | 85 | 5.9 | | | 60.0 | 1699 | 50 | 3.4 | 5 | 0.3 | 15 | 38 | 19 | 48 | 23 | 58 | 31 | 9.4 | |
| | 40 | 2.8 | | | 37.3 | 1055 | 55 | 3.8 | | | 47.4 | 1342 | 60 | 4.1 | | | 49.5 | 1402 | 70 | 4.8 | | | 52.84 | 1496 | 90 | 6.2 | | | 61.4 | 1739 | 70 | 4.8 | 10 | 0.7 | 15 | 38 | 20 | 51 | 25 | 64 | 33 | 10.1 | |
| | 45 | 3.1 | | | 40.8 | 1155 | 60 | 4.1 | | | 50.0 | 1416 | 70 | 4.8 | | | 56.8 | 1609 | 80 | 5.5 | | | 59.7 | 1691 | 100 | 6.9 | | | 67.6 | 1914 | 90 | 6.2 | 15 | 1.0 | 15 | 38 | 20 | 51 | 25 | 64 | 35 | 10.7 | |

An INTELLIGENT COMPRESSED AIR® Product

## Siphon Fed Round Pattern - 1/2 NPT

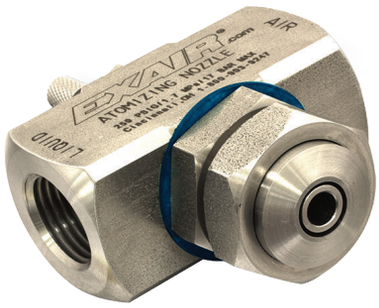

**Model: SR5010SS**
**Material:** Type 303 Stainless Steel

### Model SR5010SS

1/2 NPT siphon fed round pattern nozzles are great where no liquid pressure is available and a heavy coating is needed at a specific area. Flow rate of these larger atomizing nozzles is adjustable via the adjusting valve. 1/2 NPT Siphon nozzles work best with a suction height of 24" or less. Since these nozzles are siphon fed, the compressed airflow draws the liquid in and mixes it internally. Liquid flow is dependent both on the gravity or suction height and the airflow. 1/2 NPT siphon fed round pattern nozzles provide the most liquid flow of any siphon fed nozzle.

**Siphon or gravity fed for non-pressurized applications.**

### Dimensions and Airflow Pattern

DOWNLOAD drawings at EXAIR.com

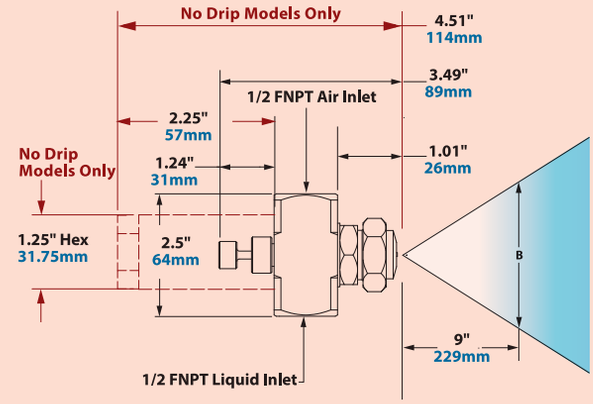


**No Drip Only Dimensions in Red**
See page 93 for No Drip Atomizing Nozzles


Use a siphon fed nozzle when no liquid pressure is available.

## Air and Liquid Caps are Interchangeable!

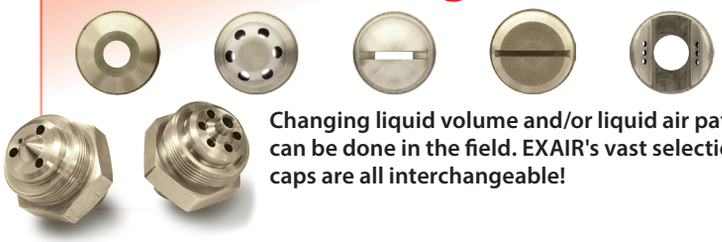

**Changing liquid volume and/or liquid air pattern can be done in the field. EXAIR's vast selection of caps are all interchangeable!**

| Model | Air Pressure PSI/BAR | | Air SCFM/SLPM | | Gravity Head 18" | 46cm | 12" | 30cm | 6" | 15cm | Siphon Height 4" | 10cm | 8" | 20cm | 12" | 30cm | 24" | 61cm | Spray Dimensions at 8" (20cm) Siphon Height: Air Pressure PSI/BAR | | Width B in | cm | Max. Depth feet/m | | Model |
|---|---|---|---|---|---|---|---|---|---|---|---|---|---|---|---|---|---|---|---|---|---|---|---|---|---|
| SR5010SS | 20 | 1.4 | 19.3 | 547 | --- | --- | --- | --- | --- | --- | 22.1 | 84 | 14.3 | 54 | --- | --- | --- | --- | 20 | 1.4 | 6 | 15 | 22 | 6.7 | SR5010SS |
| | 30 | 2.1 | 25.2 | 714 | --- | --- | --- | --- | --- | --- | 28.6 | 108 | 25.7 | 97 | 12.3 | 47 | --- | --- | 30 | 2.1 | | | 25 | 7.6 | |
| | 40 | 2.8 | 32.8 | 929 | --- | --- | 56.8 | 215 | 41 | 155 | 31.5 | 119 | 28.4 | 107 | 19.6 | 74 | --- | --- | 40 | 2.8 | | | 28 | 8.5 | |
| | 50 | 3.4 | 36.7 | 1039 | 61 | 231 | 57.4 | 217 | 42.8 | 162 | 32.1 | 121 | 30.2 | 114 | 21.8 | 83 | --- | --- | 50 | 3.4 | | | 29 | 8.8 | |
| | 60 | 4.1 | 42.2 | 1195 | 59.1 | 224 | 57.4 | 217 | 43.8 | 166 | 33.1 | 125 | 33 | 125 | 25.7 | 97 | 9.9 | 37 | 60 | 4.1 | | | 31 | 9.4 | |
| | 70 | 4.8 | 47.7 | 1351 | 66 | 250 | 58.6 | 222 | 43.8 | 166 | 35.3 | 134 | 35.3 | 134 | 29.7 | 112 | 12.5 | 47 | 70 | 4.8 | | | 35 | 10.7 | |
| | 80 | 5.5 | 52.9 | 1498 | 68.3 | 259 | 59.1 | 224 | 44.5 | 168 | 44.6 | 169 | 36.9 | 140 | 31.5 | 119 | 17.5 | 66 | 80 | 5.5 | | | 37 | 11.3 | |

Liquid Flow in GPH/LPH

# No Drip Air Atomizing Spray Nozzles

## Eliminate drips to conserve valuable liquids and improve product finishes!

### What Are No Drip Atomizing Nozzles?

EXAIR's patented† no drip atomizing spray nozzles work in the same way our standard atomizing nozzles do, but have the added benefit of positively stopping liquid flow when compressed air is shut off. All models use stainless steel construction for durability and corrosion resistance.

*EXAIR's no drip atomizing nozzles are available in 3 basic families:*

**Internal Mix:**
Internal mix nozzles mix the liquid and air inside the air cap and produce the finest atomization. Internal mix nozzles can be used on liquids with a viscosity up to 300 cP. Both air and liquid sides are pressure fed. **No Drip Internal Mix Atomizing Nozzles are for pressure fed applications not requiring independent air and liquid control.**

**External Mix:**
External mix nozzles have the highest flow rates and allow the air and liquid flows to be adjusted independently. These nozzles are best where precise liquid flow is needed. External mix nozzles can be used on liquids with a viscosity above 300 cP. Both air and liquid sides are pressure fed. **No Drip External Mix Atomizing Nozzles are for pressure fed applications with independent air and liquid control.**

**Siphon Fed:**
Siphon fed nozzles require no liquid pressure and can be used with gravity fed liquids or lift liquids from a siphon height as much as 36 inches (91cm). Siphon fed nozzles can be used on liquids with a viscosity up to 200 cP. **No Drip Siphon Fed Atomizing Nozzles are siphon or gravity fed for non-pressurized applications.**

† Patent #9156045

### Why No Drip Atomizing Nozzles?

When spraying any type of liquid, post-spray liquid flow can cause big problems. Unwanted drips can ruin product finishes on painted or coated surfaces. In addition, excess liquid flow wastes precious resources such as expensive coatings, chemicals or water. EXAIR's no drip atomizing nozzles are ideal where no post-spray drip is permissible. When the compressed air supply is shut off, the no drip nozzle positively seals off the flow of liquid eliminating the possibility of drips. They can be used in any situation that our standard atomizing nozzles can be used, including Siphon Fed applications. Unlike some manufacturers, there's no need to run a separate air line to control the no drip mechanism. The same compressed air used to combine and atomize liquid in a variety of patterns is used to open a valve allowing liquid to flow. That makes these ideal for use with EXAIR's money and energy saving EFC (see page 7).

EXAIR's no drip nozzles do not change flow rates from standard atomizing nozzles. Operations that require up to 180 cycles per minute can be achieved. Minimum operating air pressure of 30 PSIG (2.1 BAR) required for 1/4 and 1/2 NPT nozzles. 20 PSIG (1.4 BAR) is required for 1/8 NPT nozzles.

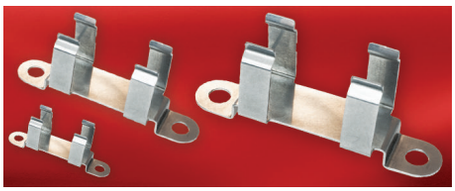

Built to Last 5 yr. WARRANTY
See our Terms & Conditions page for complete details.

**Mounting Brackets are available - Model 901786 for 1/8 NPT, Model 901318 for 1/4 NPT and Model 901556 for 1/2 NPT atomizing nozzles.**

### Applications

- Painting
- Coating
- Rinsing
- Cooling
- Quenching
- Wetting (moistening)
- Humidification
- Dust Control

### Advantages

- No post spray drip
- Adjustable
- Easily used with an EFC
- Minimizes air and liquid consumption
- All stainless steel construction
- Fine atomization
- Interchangeable liquid and air caps
- Compact

# No Drip Air Atomizing Spray Nozzles

An INTELLIGENT COMPRESSED AIR® Product

**No Drip Internal Mix Atomizing Nozzles are for pressure fed applications not requiring independent air and liquid control.**



NO DRIP INTERNAL MIX ATOMIZING NOZZLES

| Model | Description |
|---|---|
| **No Drip Internal Mix Narrow Angle Round Pattern Atomizing Nozzles** | |
| AN9010SS | No Drip Internal Mix Narrow Angle Round Pattern Atomizing Nozzles, 2.63 GPH/9.96 LPH Max, 1/8 NPT |
| AN9020SS | No Drip Internal Mix Narrow Angle Round Pattern Atomizing Nozzles, 3.33 GPH/12.61 LPH Max, 1/8 NPT |
| AN9030SS | No Drip Internal Mix Narrow Angle Round Pattern Atomizing Nozzles, 6.3 GPH/23.85 LPH Max, 1/8 NPT |
| AN9040SS | No Drip Internal Mix Narrow Angle Round Pattern Atomizing Nozzles, 12.00 GPH/45.42 LPH Max, 1/8 NPT |
| AN9050SS | No Drip Internal Mix Narrow Angle Round Pattern Atomizing Nozzles, 18.93 GPH/71.66 LPH Max, 1/8 NPT |
| AN2010SS | No Drip Internal Mix Narrow Angle Round Pattern Atomizing Nozzles, 3.3 GPH/12.5 LPH Max, 1/4 NPT |
| AN2020SS | No Drip Internal Mix Narrow Angle Round Pattern Atomizing Nozzles, 9.9 GPH/37.5 LPH Max, 1/4 NPT |
| AN2030SS | No Drip Internal Mix Narrow Angle Round Pattern Atomizing Nozzles, 23.0 GPH/87.1 LPH Max, 1/4 NPT |
| AN2040SS | No Drip Internal Mix Narrow Angle Round Pattern Atomizing Nozzles, 66.0 GPH/250 LPH Max, 1/4 NPT |
| AN6010SS | No Drip Internal Mix Narrow Angle Round Pattern Atomizing Nozzles, 75.6 GPH/286 LPH Max, 1/2 NPT |
| AN6020SS | No Drip Internal Mix Narrow Angle Round Pattern Atomizing Nozzles, 231.0 GPH/874 LPH Max, 1/2 NPT |
| **No Drip Internal Mix Wide Angle Round Pattern Atomizing Nozzles** | |
| AW9010SS | No Drip Internal Mix Wide Angle Round Pattern Atomizing Nozzles, 2.60 GPH/9.84 LPH Max, 1/8 NPT |
| AW9020SS | No Drip Internal Mix Wide Angle Round Pattern Atomizing Nozzles, 9.83 GPH/37.22 LPH Max, 1/8 NPT |
| AW9030SS | No Drip Internal Mix Wide Angle Round Pattern Atomizing Nozzles, 15.00 GPH/56.78 LPH Max, 1/8 NPT |
| AW9040SS | No Drip Internal Mix Wide Angle Round Pattern Atomizing Nozzles, 22.33 GPH/84.54 LPH Max, 1/8 NPT |
| AW2010SS | No Drip Internal Mix Wide Angle Round Pattern Atomizing Nozzles, 3.5 GPH/13.2 LPH Max, 1/4 NPT |
| AW2020SS | No Drip Internal Mix Wide Angle Round Pattern Atomizing Nozzles, 8.5 GPH/32.2 LPH Max, 1/4 NPT |
| AW2030SS | No Drip Internal Mix Wide Angle Round Pattern Atomizing Nozzles, 15.0 GPH/56.8 LPH Max, 1/4 NPT |
| AW2040SS | No Drip Internal Mix Wide Angle Round Pattern Atomizing Nozzles, 24.0 GPH/91 LPH Max, 1/4 NPT |
| AW6010SS | No Drip Internal Mix Wide Angle Round Pattern Atomizing Nozzles, 66.0 GPH/250 LPH Max, 1/2 NPT |
| AW6020SS | No Drip Internal Mix Wide Angle Round Pattern Atomizing Nozzles, 115.0 GPH/435 LPH Max, 1/2 NPT |
| AW6030SS | No Drip Internal Mix Wide Angle Round Pattern Atomizing Nozzles, 264.0 GPH/999 LPH Max, 1/2 NPT |

# No Drip Air Atomizing Spray Nozzles

| Model | Description |
|---|---|
| **No Drip Internal Mix Flat Fan Pattern Atomizing Nozzles** | |
| AF9010SS | No Drip Internal Mix Flat Fan Pattern Atomizing Nozzles, 3.47 GPH/13.12 LPH Max, 1/8 NPT |
| AF9020SS | No Drip Internal Mix Flat Fan Pattern Atomizing Nozzles, 4.27 GPH/16.15 LPH Max, 1/8 NPT |
| AF9030SS | No Drip Internal Mix Flat Fan Pattern Atomizing Nozzles, 17.00 GPH/64.35 LPH Max, 1/8 NPT |
| AF9040SS | No Drip Internal Mix Flat Fan Pattern Atomizing Nozzles, 28.00 GPH/105.99 LPH Max, 1/8 NPT |
| AF2010SS | No Drip Internal Mix Flat Fan Pattern Atomizing Nozzles, 3.2 GPH/12.1 LPH Max, 1/4 NPT |
| AF2020SS | No Drip Internal Mix Flat Fan Pattern Atomizing Nozzles, 4.7 GPH/17.8 LPH Max, 1/4 NPT |
| AF2030SS | No Drip Internal Mix Flat Fan Pattern Atomizing Nozzles, 11.0 GPH/41.6 LPH Max, 1/4 NPT |
| AF2040SS | No Drip Internal Mix Flat Fan Pattern Atomizing Nozzles, 18.3 GPH/69.3 LPH Max, 1/4 NPT |
| AF2050SS | No Drip Internal Mix Flat Fan Pattern Atomizing Nozzles, 42.0 GPH/159 LPH Max, 1/4 NPT |
| AF6010SS | No Drip Internal Mix Flat Fan Pattern Atomizing Nozzles, 46.2 GPH/175 LPH Max, 1/2 NPT |
| AF6020SS | No Drip Internal Mix Flat Fan Pattern Atomizing Nozzles, 231.0 GPH/874 LPH Max, 1/2 NPT |
| **No Drip Internal Mix Deflected Flat Fan Pattern Atomizing Nozzles** | |
| AD2010SS | No Drip Internal Mix Deflected Flat Fan Pattern Atomizing Nozzles, 6.9 GPH/26 LPH Max, 1/4 NPT |
| **No Drip Internal Mix 360° Hollow Circular Pattern Atomizing Nozzles** | |
| AT2010SS | No Drip Internal Mix 360° Hollow Circular Pattern Atomizing Nozzles, 14.7 GPH/55.7 LPH Max, 1/4 NPT |
| AT6010SS | No Drip Internal Mix 360° Hollow Circular Pattern Atomizing Nozzles, 150 GPH/568 LPH Max, 1/2 NPT |

NO DRIP INTERNAL MIX ATOMIZING NOZZLES

# No Drip Air Atomizing Spray Nozzles

An INTELLIGENT COMPRESSED AIR® Product

**No Drip External Mix Atomizing Nozzles are for pressure fed applications with independent air and liquid control.**



NO DRIP EXTERNAL MIX ATOMIZING NOZZLES

| Model | Description |
|---|---|
| **No Drip External Mix Round Pattern Atomizing Nozzles** | |
| ER2010SS | No Drip External Mix Round Pattern Atomizing Nozzles, 3.8 GPH/14.4 LPH Max, 1/4 NPT |
| ER2020SS | No Drip External Mix Round Pattern Atomizing Nozzles, 7.5 GPH/28.4 LPH Max, 1/4 NPT |
| ER2030SS | No Drip External Mix Round Pattern Atomizing Nozzles, 14.0 GPH/53.0 LPH Max, 1/4 NPT |
| ER2040SS | No Drip External Mix Round Pattern Atomizing Nozzles, 31.0 GPH/117 LPH Max, 1/4 NPT |
| ER2050SS | No Drip External Mix Round Pattern Atomizing Nozzles, 60.0 GPH/227 LPH Max, 1/4 NPT |
| **No Drip External Mix Narrow Angle Flat Fan Pattern Atomizing Nozzles** | |
| EF9010SS | No Drip External Mix Narrow Angle Flat Fan Pattern Atomizing Nozzles, 2.00 GPH/7.57 LPH Max, 1/8 NPT |
| EF9020SS | No Drip External Mix Narrow Angle Flat Fan Pattern Atomizing Nozzles, 2.93 GPH/11.09 LPH Max, 1/8 NPT |
| EF9030SS | No Drip External Mix Narrow Angle Flat Fan Pattern Atomizing Nozzles, 7.67 GPH/29.03 LPH Max, 1/8 NPT |
| EF9040SS | No Drip External Mix Narrow Angle Flat Fan Pattern Atomizing Nozzles, 14.42 GPH/54.59 LPH Max, 1/8 NPT |
| EF9050SS | No Drip External Mix Narrow Angle Flat Fan Pattern Atomizing Nozzles, 25.00 GPH/94.64 LPH Max, 1/8 NPT |
| EF2010SS | No Drip External Mix Narrow Angle Flat Fan Pattern Atomizing Nozzles, 3.8 GPH/14.4 LPH Max, 1/4 NPT |
| EF2020SS | No Drip External Mix Narrow Angle Flat Fan Pattern Atomizing Nozzles, 7.5 GPH/28.4 LPH Max, 1/4 NPT |
| EF2030SS | No Drip External Mix Narrow Angle Flat Fan Pattern Atomizing Nozzles, 14.0 GPH/53.0 LPH Max, 1/4 NPT |
| EF2040SS | No Drip External Mix Narrow Angle Flat Fan Pattern Atomizing Nozzles, 31.0 GPH/117 LPH Max, 1/4 NPT |
| EF6010SS | No Drip External Mix Narrow Angle Flat Fan Pattern Atomizing Nozzles, 303.0 GPH/1,147 LPH Max, 1/2 NPT |
| **No Drip External Mix Wide Angle Flat Fan Pattern Atomizing Nozzles** | |
| EB2010SS | No Drip External Mix Wide Angle Flat Fan Pattern Atomizing Nozzles, 3.8 GPH/14.4 LPH Max, 1/4 NPT |
| EB2020SS | No Drip External Mix Wide Angle Flat Fan Pattern Atomizing Nozzles, 7.5 GPH/28.4 LPH Max, 1/4 NPT |
| EB2030SS | No Drip External Mix Wide Angle Flat Fan Pattern Atomizing Nozzles, 14.0 GPH/53.0 LPH Max, 1/4 NPT |
| EB2040SS | No Drip External Mix Wide Angle Flat Fan Pattern Atomizing Nozzles, 31.0 GPH/117 LPH Max, 1/4 NPT |

# No Drip Air Atomizing Spray Nozzles

An INTELLIGENT COMPRESSED AIR® Product

No Drip Siphon Fed Atomizing Nozzles are siphon or gravity fed for non-pressurized applications.

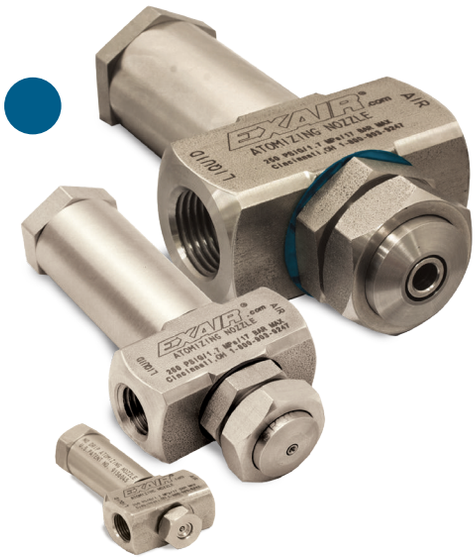

NO DRIP SIPHON FED ATOMIZING NOZZLES

| Model | Description |
|---|---|
| **No Drip Siphon Fed Round Pattern Atomizing Nozzles** | |
| SR9010SS | No Drip Siphon Fed Round Pattern Atomizing Nozzles, 0.53 GPH/2.02 LPH Max, 1/8 NPT |
| SR9020SS | No Drip Siphon Fed Round Pattern Atomizing Nozzles, 0.96 GPH/3.63 LPH Max, 1/8 NPT |
| SR9030SS | No Drip Siphon Fed Round Pattern Atomizing Nozzles, 1.98 GPH/7.50 LPH Max, 1/8 NPT |
| SR9040SS | No Drip Siphon Fed Round Pattern Atomizing Nozzles, 4.09 GPH/15.48 LPH Max, 1/8 NPT |
| SR9050SS | No Drip Siphon Fed Round Pattern Atomizing Nozzles, 5.12 GPH/19.38 LPH Max, 1/8 NPT |
| SR2010SS | No Drip Siphon Fed Round Pattern Atomizing Nozzles, 0.8 GPH/3.0 LPH Max, 1/4 NPT |
| SR2020SS | No Drip Siphon Fed Round Pattern Atomizing Nozzles, 1.9 GPH/7.2 LPH Max, 1/4 NPT |
| SR2030SS | No Drip Siphon Fed Round Pattern Atomizing Nozzles, 5.8 GPH/22.0 LPH Max, 1/4 NPT |
| SR2040SS | No Drip Siphon Fed Round Pattern Atomizing Nozzles, 15.0 GPH/56.8 LPH Max, 1/4 NPT |
| SR6010SS | No Drip Siphon Fed Round Pattern Atomizing Nozzles, 68.3 GPH/259 LPH Max, 1/2 NPT |

**No Drip Siphon Fed Flat Fan Pattern Atomizing Nozzles**

| | |
|---|---|
| SF9010SS | No Drip Siphon Fed Flat Fan Pattern Atomizing Nozzles, 0.43 GPH/1.62 LPH Max, 1/8 NPT |
| SF9020SS | No Drip Siphon Fed Flat Fan Pattern Atomizing Nozzles, 1.52 GPH/5.75 LPH Max, 1/8 NPT |
| SF9030SS | No Drip Siphon Fed Flat Fan Pattern Atomizing Nozzles, 1.45 GPH/5.49 LPH Max, 1/8 NPT |
| SF2010SS | No Drip Siphon Fed Flat Fan Pattern Atomizing Nozzles, 0.4 GPH/1.5 LPH Max, 1/4 NPT |
| SF2020SS | No Drip Siphon Fed Flat Fan Pattern Atomizing Nozzles, 1.2 GPH/4.5 LPH Max, 1/4 NPT |
| SF2030SS | No Drip Siphon Fed Flat Fan Pattern Atomizing Nozzles, 1.9 GPH/7.2 LPH Max, 1/4 NPT |

An INTELLIGENT COMPRESSED AIR® Product


# Liquid Atomizing Spray Nozzles

## Pressurized liquid nozzles increase liquid flow for cooling, washing and rinsing!

### What are Liquid Atomizing Spray Nozzles?

EXAIR's Liquid Atomizing Spray Nozzles require no air to operate. They produce droplets by spinning the liquid and breaking its surface tension through a precision orifice or by impacting the liquid on to a surface of the nozzle. Compared to EXAIR's Air Atomizing Spray Nozzles, liquid atomizing spray nozzles generate more liquid volume and produce a more coarse spray pattern. The higher liquid flow rates benefit some common industrial applications like cleaning, cooling, rinsing, dust suppression and washing. Many liquid atomizing spray nozzles operate well when the liquid they are spraying contains particulate or is a slurry.

### Why Liquid Atomizing Spray Nozzles?

They are good general purpose nozzles for industry and are commonly used with inexpensive liquids like water, rinse aids or detergents while also very effective with chemicals, pesticides and herbicides. Adjustment of the liquid flow rate can be done with varying liquid pressure but without the same adjustability or refinement of Air Atomizing Spray Nozzles. Their smaller footprint allows for mounting in smaller spaces and with less plumbing required, since no air line is needed. Liquid nozzles, made of Type 303 stainless steel are durable and rugged, with no moving parts and have a maximum operating temperature of 800°F (427°C).

Built to Last 5 yr. WARRANTY
See our Terms & Conditions page for complete details

### Applications

- Cooling
- Quenching
- Coating
- Dust suppression
- Washing
- Rinsing
- Foam breaking
- Slurry spraying
- Sanitizing
- Degreasing
- Lubricating

### Advantages

- High liquid flow rates
- Increase surface area coverage
- Increase liquid volume on your target
- All stainless steel construction
- Compact footprint
- Versatile

EXAIR
11510 Goldcoast Drive • Cincinnati, OH 45249-1621 • Phone (513) 671-3322
FAX (513) 671-3363 • E-mail: techelp@exair.com • www.exair.com

Order Direct We Ship From Stock

# Liquid Atomizing Spray Nozzles

## OmniStream™ Cone Nozzles - 1/4 NPT

**Model: FL1008SS**
**Material:** Type 303 Stainless Steel

**Model: FL1010SS**
**Material:** Type 303 Stainless Steel

**Model: FL1011SS**
**Material:** Type 303 Stainless Steel

**Model FL1008SS, FL1010SS and FL1011SS**
EXAIR's 1/4 NPT OmniStream Cone Nozzles, with a full cone spray pattern, are among the most common type of spray nozzles. Full cone spray nozzles are applied to solve cooling, cleaning, washing, rinsing and dust suppression applications throughout industry. Their tangential flow design is vaneless, which creates wide open internal features to resist clogging. This produces a uniform distribution in a full cone round pattern and medium to large droplets. Their right-angle design is compact and operates at up to 250 PSI liquid pressure. OmniStream nozzles also work well with liquids containing particulate.

## Dimensions and Spray Pattern

DOWNLOAD drawings at EXAIR.com

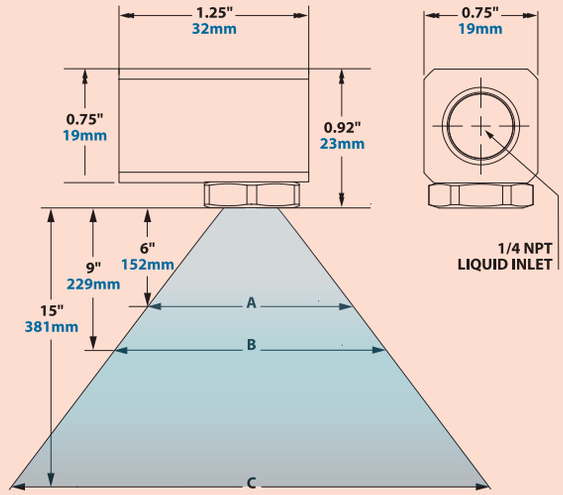


## How OmniStream and HollowStream Cone Nozzles Work

**With OmniStream and HollowStream nozzles, the atomizing fluid is supplied into the body of the nozzle creating a swirling action within the vortex chamber. This vortex produces a full cone spray pattern when the precisely machined nozzle breaks the liquid surface tension as it exits the orifice at a controlled spray angle.**

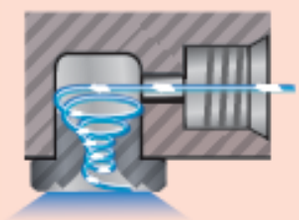

Compared to EXAIR's Air Atomizing Spray Nozzles the OmniStream will have higher liquid flow rates.

For maximum liquid conservation and spray control visit Air Atomizing Nozzles on page 70.

**1/4 NPT OmniStream Cone Nozzle with full cone spray pattern is rinsing anodized aluminium pipe.**

### OmniStream Cone Nozzles

| Inlet Connection | Model | Capacity | Max Free Passage | | Flow Rate GPM/LPM 3 PSI | 5 PSI | 7 PSI | 10 PSI | 20 PSI | 40 PSI | 60 PSI |
|---|---|---|---|---|---|---|---|---|---|---|---|
| 1/4 NPT | FL1008SS | 8 | 0.109" | GPM | 0.50 | 0.60 | 0.70 | 0.80 | 1.15 | 1.55 | 1.80 |
| | | | | LPM | 1.89 | 2.27 | 2.65 | 3.03 | 4.35 | 5.87 | 6.81 |
| | FL1010SS | 10 | 0.125" | GPM | 0.48 | 0.67 | 0.83 | 1.00 | 1.34 | 1.88 | 2.36 |
| | | | | LPM | 1.82 | 2.54 | 3.14 | 3.79 | 5.07 | 7.12 | 8.93 |
| | FL1011SS | 11 | 0.144" | GPM | 0.62 | 0.85 | 0.96 | 1.10 | 1.51 | 2.21 | 2.66 |
| | | | | LPM | 2.35 | 3.22 | 3.63 | 4.16 | 5.72 | 8.36 | 10.07 |

### Spray Angle

| Inlet Pressure PSI | BAR | Width A in | A cm | B in | B cm | C in | C cm | |
|---|---|---|---|---|---|---|---|---|
| 7 | 0.5 | 5.7 | 14 | 8.6 | 22 | 14.3 | 36 | FL1008SS |
| 20 | 1.4 | 7.4 | 19 | 11.0 | 28 | 18.4 | 47 | |
| 60 | 4.1 | 8.4 | 21 | 12.6 | 32 | 21.0 | 53 | |
| 7 | 0.5 | 6.8 | 17 | 10.2 | 26 | 17.0 | 43 | FL1010SS |
| 20 | 1.4 | 8.7 | 22 | 13.1 | 33 | 21.8 | 55 | |
| 60 | 4.1 | 10.1 | 26 | 15.1 | 38 | 25.2 | 64 | |
| 7 | 0.5 | 6.8 | 17 | 10.2 | 26 | 17.0 | 43 | FL1011SS |
| 20 | 1.4 | 8.7 | 22 | 13.1 | 33 | 21.8 | 55 | |
| 60 | 4.1 | 10.1 | 26 | 15.1 | 38 | 25.2 | 64 | |

## OmniStream™ Cone Nozzles - 3/8 NPT

**Model: FL3011SS**
**Material:** Type 303 Stainless Steel

**Model: FL3013SS**
**Material:** Type 303 Stainless Steel

**Model: FL3016SS**
**Material:** Type 303 Stainless Steel

**Model: FL3020SS**
**Material:** Type 303 Stainless Steel

**Model: FL3023SS**
**Material:** Type 303 Stainless Steel

**Model: FL3026SS**
**Material:** Type 303 Stainless Steel

**Model: FL3029SS**
**Material:** Type 303 Stainless Steel

Compared to EXAIR's Air Atomizing Spray Nozzles the OmniStream will have higher liquid flow rates.

For maximum liquid conservation and spray control visit Air Atomizing Nozzles on page 70.

### Model FL3011SS, FL3013SS, FL3016SS, FL3020SS, FL3023SS, FL3026SS and FL3029SS

EXAIR's 3/8 NPT OmniStream Cone Nozzles, with a full cone spray pattern, are among the most common type of spray nozzles. Full cone spray nozzles are applied to solve cooling, cleaning, washing, rinsing and dust suppression applications throughout industry. Their tangential flow design is vaneless, which creates wide open internal features to resist clogging. This produces a uniform distribution in a full cone round pattern and medium to large droplets. Their right-angle design is compact and operates at up to 250 PSI liquid pressure. OmniStream nozzles also work well with liquids containing particulate.

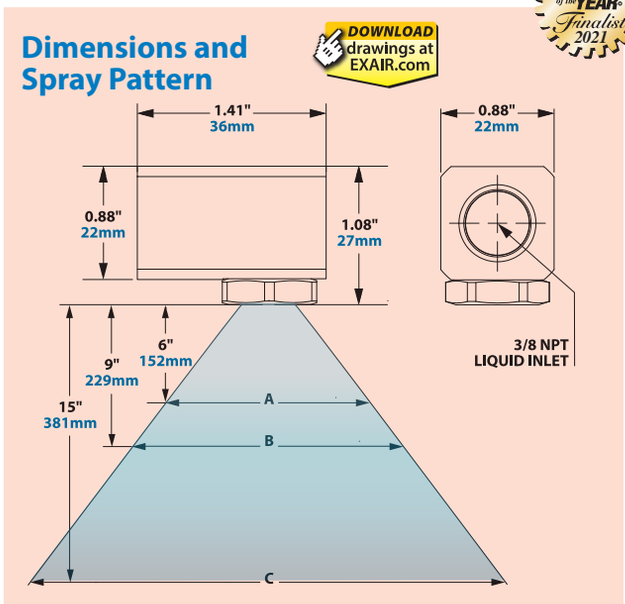


3/8 NPT OmniStream Cone Nozzle washing the inside of a 55 gallon drum.

Liquid Nozzles

**OmniStream Cone Nozzles**

| Inlet Connection | Model | Capacity | Max Free Passage | | Flow Rate GPM/LPM 3 PSI | 5 PSI | 7 PSI | 10 PSI | 20 PSI | 40 PSI | 60 PSI |
|---|---|---|---|---|---|---|---|---|---|---|---|
| 3/8 NPT | FL3011SS | 11 | 0.128" | GPM | 0.57 | 0.76 | 0.91 | 1.10 | 1.52 | 2.20 | 2.70 |
| | | | | LPM | 2.16 | 2.88 | 3.44 | 4.16 | 5.75 | 8.33 | 10.22 |
| | FL3013SS | 13 | 0.144" | GPM | 0.75 | 0.95 | 1.13 | 1.30 | 1.86 | 2.60 | 3.34 |
| | | | | LPM | 2.84 | 3.60 | 4.28 | 4.92 | 7.04 | 9.84 | 12.64 |
| | FL3016SS | 16 | 0.154" | GPM | 0.98 | 1.10 | 1.25 | 1.60 | 2.23 | 2.90 | 3.60 |
| | | | | LPM | 3.71 | 4.16 | 4.73 | 6.06 | 8.44 | 10.98 | 13.63 |
| | FL3020SS | 20 | 0.172" | GPM | 1.22 | 1.64 | 1.88 | 2.00 | 2.98 | 4.24 | 4.82 |
| | | | | LPM | 4.62 | 6.21 | 7.12 | 7.57 | 11.28 | 16.05 | 18.24 |
| | FL3023SS | 23 | 0.189" | GPM | 1.36 | 1.76 | 1.96 | 2.30 | 3.18 | 4.56 | 5.38 |
| | | | | LPM | 5.15 | 6.66 | 7.42 | 8.71 | 12.04 | 17.26 | 20.36 |
| | FL3026SS | 26 | 0.204" | GPM | 1.26 | 1.80 | 2.02 | 2.60 | 3.30 | 5.18 | 6.12 |
| | | | | LPM | 4.77 | 6.81 | 7.65 | 9.84 | 12.49 | 19.61 | 23.17 |
| | FL3029SS | 29 | 0.221" | GPM | 1.30 | 1.84 | 2.28 | 2.90 | 3.62 | 5.48 | 6.48 |
| | | | | LPM | 4.92 | 6.97 | 8.63 | 10.98 | 13.70 | 20.74 | 24.53 |

**Spray Angle**

| Inlet Pressure PSI | BAR | Width A in | A cm | B in | B cm | C in | C cm | |
|---|---|---|---|---|---|---|---|---|
| 7 | 0.5 | 8.1 | 21 | 12.1 | 31 | 20.2 | 51 | FL3011SS |
| 20 | 1.4 | 9.9 | 25 | 14.8 | 38 | 24.7 | 63 | |
| 60 | 4.1 | 10.4 | 26 | 15.6 | 40 | 26.1 | 66 | |
| 7 | 0.5 | 7.6 | 19 | 11.5 | 29 | 19.1 | 49 | FL3013SS |
| 20 | 1.4 | 9.0 | 23 | 13.6 | 35 | 22.6 | 57 | |
| 60 | 4.1 | 10.4 | 26 | 15.6 | 40 | 26.1 | 66 | |
| 7 | 0.5 | 7.6 | 19 | 11.5 | 29 | 19.1 | 49 | FL3016SS |
| 20 | 1.4 | 9.7 | 25 | 14.6 | 37 | 24.3 | 62 | |
| 60 | 4.1 | 10.4 | 26 | 15.6 | 40 | 26.1 | 66 | |
| 7 | 0.5 | 8.4 | 21 | 12.6 | 32 | 21.0 | 53 | FL3020SS |
| 20 | 1.4 | 9.9 | 25 | 14.8 | 38 | 24.7 | 63 | |
| 60 | 4.1 | 11.2 | 28 | 16.8 | 43 | 28.0 | 71 | |
| 7 | 0.5 | 9.0 | 23 | 13.6 | 35 | 22.6 | 57 | FL3023SS |
| 20 | 1.4 | 10.2 | 26 | 15.4 | 39 | 25.6 | 65 | |
| 60 | 4.1 | 11.2 | 28 | 16.8 | 43 | 18.0 | 46 | |
| 7 | 0.5 | 9.7 | 25 | 14.6 | 37 | 24.3 | 62 | FL3026SS |
| 20 | 1.4 | 10.8 | 27 | 16.2 | 41 | 27.0 | 69 | |
| 60 | 4.1 | 12.0 | 30 | 18.0 | 46 | 30.0 | 76 | |
| 7 | 0.5 | 9.9 | 25 | 14.8 | 38 | 24.7 | 63 | FL3029SS |
| 20 | 1.4 | 10.8 | 27 | 16.2 | 41 | 27.0 | 69 | |
| 60 | 4.1 | 12.0 | 30 | 18.0 | 46 | 30.0 | 76 | |

# Liquid Atomizing Spray Nozzles

## OmniStream™ Cone Nozzles - 1/2 NPT


**Model: FL5032SS**
**Material:** Type 303 Stainless Steel

**Model: FL5040SS**
**Material:** Type 303 Stainless Steel

**Model: FL5048SS**
**Material:** Type 303 Stainless Steel

**Model: FL5056SS**
**Material:** Type 303 Stainless Steel

**Model: FL5064SS**
**Material:** Type 303 Stainless Steel

**Model: FL5072SS**
**Material:** Type 303 Stainless Steel

Liquid Nozzles

**Compared to EXAIR's Air Atomizing Spray Nozzles the OmniStream will have higher liquid flow rates.**

**For maximum liquid conservation and spray control visit Air Atomizing Nozzles on page 70.**

### Model FL5032SS, FL5040SS, FL5048SS, FL5056SS, FL5064SS and FL5072SS

EXAIR's 1/2 NPT OmniStream Cone Nozzles, with a full cone spray pattern, are among the most common type of spray nozzles. Full cone spray nozzles are applied to solve cooling, cleaning, washing, rinsing and dust suppression applications throughout industry. Their tangential flow design is vaneless, which creates wide open internal features to resist clogging. This produces a uniform distribution in a full cone round pattern and medium to large droplets. Their right-angle design is compact and operates at up to 250 PSI liquid pressure. OmniStream nozzles also work well with liquids containing particulate.

## Dimensions Spray Pattern

DOWNLOAD drawings at EXAIR.com

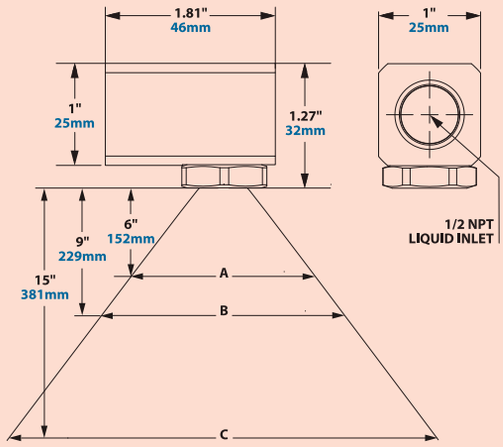


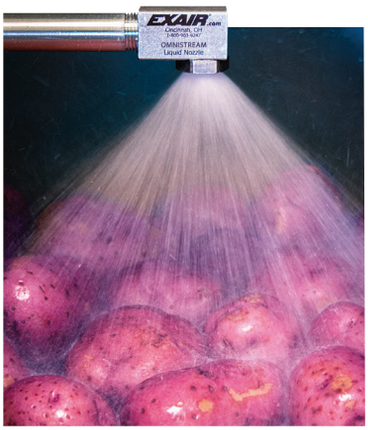

**1/2 NPT OmniStream Cone Nozzle with cone spray pattern is cleaning red potatoes.**

### OmniStream Cone Nozzles

| Inlet Connection | Model | Capacity | Max Free Passage | | Flow Rate GPM/LPM 3 PSI | 5 PSI | 7 PSI | 10 PSI | 20 PSI | 40 PSI | 60 PSI |
|---|---|---|---|---|---|---|---|---|---|---|---|
| 1/2 NPT | FL5032SS | 32 | 0.201" | GPM | 1.74 | 2.46 | 2.80 | 3.20 | 4.46 | 6.28 | 7.30 |
| | | | | LPM | 6.59 | 9.31 | 10.60 | 12.11 | 16.88 | 23.77 | 27.63 |
| | FL5040SS | 40 | 0.242" | GPM | 2.68 | 3.14 | 3.52 | 4.00 | 5.60 | 7.80 | 8.76 |
| | | | | LPM | 10.14 | 11.89 | 13.32 | 15.14 | 21.20 | 29.53 | 33.16 |
| | FL5048SS | 48 | 0.281" | GPM | 3.06 | 3.56 | 3.96 | 4.80 | 6.81 | 9.58 | 11.73 |
| | | | | LPM | 11.28 | 13.48 | 15.00 | 18.17 | 25.78 | 39.26 | 44.40 |
| | FL5056SS | 56 | 0.295" | GPM | 3.32 | 4.18 | 4.67 | 5.60 | 7.89 | 11.22 | 13.74 |
| | | | | LPM | 12.57 | 15.82 | 17.68 | 21.20 | 29.87 | 42.47 | 52.01 |
| | FL5064SS | 64 | 0.328" | GPM | 3.50 | 4.50 | 5.15 | 6.40 | 9.13 | 12.70 | 15.81 |
| | | | | LPM | 13.25 | 17.03 | 19.49 | 24.23 | 34.56 | 48.07 | 59.85 |
| | FL5072SS | 72 | 0.359" | GPM | 4.08 | 5.00 | 6.17 | 7.20 | 10.17 | 14.40 | 17.64 |
| | | | | LPM | 15.44 | 18.93 | 23.36 | 27.25 | 38.50 | 54.51 | 66.77 |

### Spray Angle

| Inlet Pressure PSI | BAR | A in | A cm | B in | B cm | C in | C cm | |
|---|---|---|---|---|---|---|---|---|
| 7 | 0.5 | 9.4 | 23.9 | 14.1 | 35.81 | 23.4 | 59.4 | FL5032SS |
| 20 | 1.4 | 10.1 | 25.7 | 15.1 | 38.3 | 25.2 | 64.0 | |
| 60 | 4.1 | 12.0 | 30.5 | 18.0 | 45.7 | 30.0 | 76.2 | |
| 7 | 0.5 | 10.1 | 25.7 | 15.1 | 38.4 | 25.2 | 64.0 | FL5040SS |
| 20 | 1.4 | 12.0 | 30.5 | 18.0 | 45.7 | 30.0 | 76.2 | |
| 60 | 4.1 | 13.1 | 33.3 | 19.6 | 49.8 | 32.7 | 83.1 | |
| 7 | 0.5 | 10.1 | 25.7 | 15.1 | 38.4 | 25.2 | 64.0 | FL5048SS |
| 20 | 1.4 | 12.0 | 30.5 | 18.0 | 45.7 | 30.0 | 76.2 | |
| 60 | 4.1 | 13.1 | 33.3 | 19.6 | 49.8 | 32.7 | 83.1 | |
| 7 | 0.5 | 11.0 | 28.0 | 16.5 | 42.0 | 27.5 | 69.9 | FL5056SS |
| 20 | 1.4 | 12.0 | 30.5 | 18.0 | 45.7 | 30.0 | 76.2 | |
| 60 | 4.1 | 13.1 | 33.3 | 19.6 | 49.8 | 32.7 | 83.1 | |
| 7 | 0.5 | 11.0 | 28.0 | 16.5 | 42.0 | 27.5 | 69.9 | FL5064SS |
| 20 | 1.4 | 12.0 | 30.5 | 18.0 | 45.7 | 30.0 | 76.2 | |
| 60 | 4.1 | 13.1 | 33.3 | 19.6 | 49.8 | 32.7 | 83.1 | |
| 7 | 0.5 | 11.0 | 28.0 | 16.5 | 42.0 | 27.5 | 69.9 | FL5072SS |
| 20 | 1.4 | 12.0 | 30.5 | 18.0 | 45.7 | 30.0 | 76.2 | |
| 60 | 4.1 | 13.1 | 33.3 | 19.6 | 49.8 | 32.7 | 83.1 | |

## HollowStream™ Cone Nozzles – 1/8 NPT


**Model: HL80X5SS**
**Material:** Type 303 Stainless Steel

**Model: HL8001SS**
**Material:** Type 303 Stainless Steel

**Model: HL8002SS**
**Material:** Type 303 Stainless Steel

**Model: HL8003SS**
**Material:** Type 303 Stainless Steel

**Model: HL8005SS**
**Material:** Type 303 Stainless Steel

**Model: HL8008SS**
**Material:** Type 303 Stainless Steel

**Model: HL8010SS**
**Material:** Type 303 Stainless Steel

Compared to EXAIR's Air Atomizing Spray Nozzles the HollowStream will have higher liquid flow rates.

For maximum liquid conservation and spray control visit Air Atomizing Nozzles on page 70.

**Model HL80X5SS, HL8001SS, HL8002SS, HL8003SS, HL8005SS, HL8008SS and HL8010SS**

EXAIR's 1/8 NPT HollowStream™ Cone Nozzles, with a circular ring spray pattern, are among the most common type of spray nozzles. Hollow cone spray nozzles are applied to solve cooling, cleaning, washing, rinsing and dust suppression applications throughout industry with less liquid than their full cone counterparts. Their design is vaneless, which creates wide open internal features to resist clogging and can work well with liquids containing particulate. They produce a uniform distribution in a hollow cone ring pattern. Their right-angle design is compact and operates up to 250 PSI liquid pressure. They are commonly used with liquids like water, rinse aids or detergents but are also effective with chemicals, pesticides and herbicides. Adjustment of the liquid flow rate is done by varying liquid pressure.

### Dimensions Spray Pattern

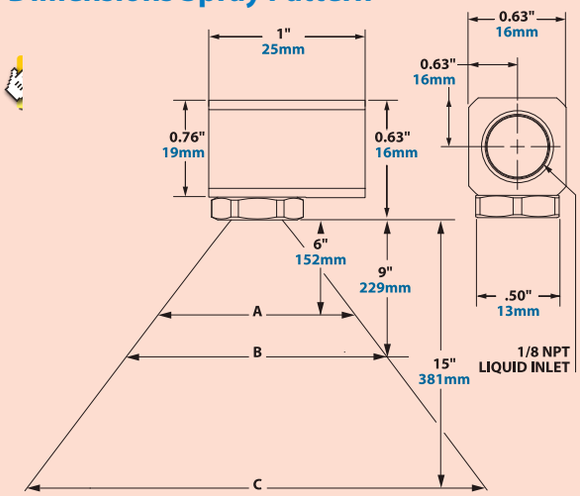


See page 98 for How the OmniStream and HollowStream Cone Nozzles Work.

HollowStream Nozzles rinse off bottles as part of a filling and packaging operation.

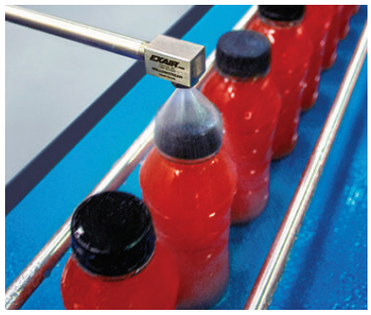

**HollowStream Cone Nozzles**

| Inlet Connection | Model | Capacity | Max Free Passage | | Flow Rate GPM/LPM 3 PSI | 5 PSI | 7 PSI | 10 PSI | 20 PSI | 40 PSI | 60 PSI |
|---|---|---|---|---|---|---|---|---|---|---|---|
| 1/8 NPT | HL80X5SS | 5 | 0.035" | GPM | 0.033 | 0.040 | 0.046 | 0.050 | 0.072 | 0.100 | 0.156 |
| | | | | LPM | 0.125 | 0.151 | 0.174 | 0.189 | 0.273 | 0.379 | 0.591 |
| | HL8001SS | 1 | 0.063" | GPM | 0.067 | 0.083 | 0.094 | 0.100 | 0.153 | 0.206 | 0.239 |
| | | | | LPM | 0.254 | 0.314 | 0.356 | 0.379 | 0.579 | 0.780 | 0.905 |
| | HL8002SS | 2 | 0.078" | GPM | 0.12 | 0.15 | 0.18 | 0.20 | 0.25 | 0.35 | 0.42 |
| | | | | LPM | 0.44 | 0.57 | 0.66 | 0.76 | 0.93 | 1.31 | 1.60 |
| | HL8003SS | 3 | 0.094" | GPM | 0.20 | 0.22 | 0.26 | 0.30 | 0.43 | 0.61 | 0.75 |
| | | | | LPM | 0.76 | 0.82 | 0.98 | 1.14 | 1.62 | 2.32 | 2.84 |
| | HL8005SS | 5 | 0.125" | GPM | 0.25 | 0.33 | 0.39 | 0.48 | 0.67 | 0.95 | 1.18 |
| | | | | LPM | 0.95 | 1.25 | 1.49 | 1.82 | 2.54 | 3.61 | 4.46 |
| | HL8008SS | 8 | 0.156" | GPM | 0.45 | 0.55 | 0.67 | 0.80 | 1.18 | 1.62 | 1.90 |
| | | | | LPM | 1.70 | 2.08 | 2.54 | 3.03 | 4.47 | 6.13 | 7.19 |
| | HL8010SS | 10 | 0.159" | GPM | 0.48 | 0.64 | 0.79 | 0.96 | 1.31 | 1.85 | 2.10 |
| | | | | LPM | 1.82 | 2.42 | 2.99 | 3.63 | 4.96 | 7.00 | 7.95 |

**Spray Dimensions**

| Inlet Pressure PSI/BAR | | Spray Angle Degrees | Width A in | A cm | B in | B cm | C in | C cm | |
|---|---|---|---|---|---|---|---|---|---|
| 7 | 0.5 | X | X | X | X | X | X | X | HL80X5SS |
| 20 | 1.4 | 20 | 0.4 | 0.9 | 1.1 | 2.7 | 2.1 | 5.4 | |
| 60 | 4.1 | 55 | 1.0 | 2.6 | 3.1 | 7.9 | 6.2 | 15.9 | |
| 7 | 0.5 | 23 | X | X | X | X | X | X | HL8001SS |
| 20 | 1.4 | 50 | 0.9 | 2.4 | 2.8 | 7.1 | 5.6 | 14.2 | |
| 60 | 4.1 | 60 | 1.2 | 2.9 | 3.5 | 8.8 | 6.9 | 17.6 | |
| 7 | 0.5 | 50 | 0.9 | 2.4 | 2.8 | 7.1 | 5.6 | 14.2 | HL8002SS |
| 20 | 1.4 | 53 | 1.0 | 2.5 | 3.0 | 7.6 | 6.0 | 15.2 | |
| 60 | 4.1 | 60 | 1.2 | 2.9 | 3.5 | 8.8 | 6.9 | 17.6 | |
| 7 | 0.5 | 50 | 0.9 | 2.4 | 2.8 | 7.1 | 5.6 | 14.2 | HL8003SS |
| 20 | 1.4 | 53 | 1.0 | 2.5 | 3.0 | 7.6 | 6.0 | 15.2 | |
| 60 | 4.1 | 60 | 1.2 | 2.9 | 3.5 | 8.8 | 6.9 | 17.6 | |
| 7 | 0.5 | 40 | 0.7 | 1.8 | 2.2 | 5.5 | 4.4 | 11.1 | HL8005SS |
| 20 | 1.4 | 57 | 1.1 | 2.8 | 3.3 | 8.3 | 6.5 | 16.5 | |
| 60 | 4.1 | 70 | 1.4 | 3.6 | 4.2 | 10.7 | 8.4 | 21.3 | |
| 7 | 0.5 | 53 | 1.0 | 2.5 | 3.0 | 7.6 | 6.0 | 15.2 | HL8008SS |
| 20 | 1.4 | 60 | 1.2 | 2.9 | 3.5 | 8.8 | 6.9 | 17.6 | |
| 60 | 4.1 | 62 | 1.2 | 3.1 | 3.6 | 9.2 | 7.2 | 18.3 | |
| 7 | 0.5 | 60 | 1.2 | 2.9 | 3.5 | 8.8 | 6.9 | 17.6 | HL8010SS |
| 20 | 1.4 | 65 | 1.3 | 3.2 | 3.8 | 9.7 | 7.6 | 19.4 | |
| 60 | 4.1 | 70 | 1.4 | 3.6 | 4.2 | 10.7 | 8.4 | 21.3 | |

# Liquid Atomizing Spray Nozzles

## HollowStream™ Cone Nozzles – 1/4 NPT

**Model: HL1001SS**
**Material:** Type 303 Stainless Steel

**Model: HL1002SS**
**Material:** Type 303 Stainless Steel

**Model: HL1003SS**
**Material:** Type 303 Stainless Steel

**Model: HL1005SS**
**Material:** Type 303 Stainless Steel

**Model: HL1008SS**
**Material:** Type 303 Stainless Steel

**Model: HL1011SS**
**Material:** Type 303 Stainless Steel

Liquid Nozzles

**Compared to EXAIR's Air Atomizing Spray Nozzles the HollowStream will have higher liquid flow rates.**

**For maximum liquid conservation and spray control visit Air Atomizing Nozzles on page 70.**

### Model HL1001SS, HL1002SS, HL1003SS, HL1005SS, HL1008SS and HL1011SS

EXAIR's 1/4 NPT HollowStream Cone Nozzles produce a ring of liquid upon your target and are among the most common type of spray nozzles. Hollow cone spray nozzles generally use less liquid than full cone spray nozzles. These nozzles will be used when cooling, cleaning, washing, rinsing and dust suppression can be achieved with less liquid than a full cone nozzle. Their tangential flow design is vaneless which creates wide open internal features to resist clogging. They produce a uniform distribution in a hollow cone round pattern and medium to large droplets. The right-angle design is compact and operates at up to 250 PSI liquid pressure. HollowStream nozzles also work well with liquids containing particulate.

## Dimensions and Spray Pattern

DOWNLOAD drawings at EXAIR.com

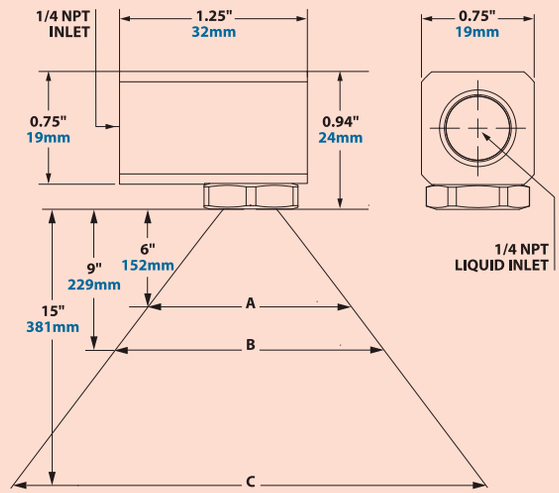


See page 98 for How the OmniStream and HollowStream Cone Nozzles Work.

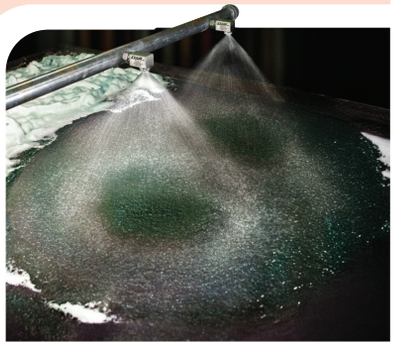

HollowStream Nozzles break and remove foam from a washing basin.

### HollowStream Cone Nozzles

| Inlet Connection | Model | Capacity | Max Free Passage | | Flow Rate GPM/LPM 3 PSI | 5 PSI | 7 PSI | 10 PSI | 20 PSI | 40 PSI | 60 PSI |
|---|---|---|---|---|---|---|---|---|---|---|---|
| 1/4 NPT | HL1001SS | 1 | 0.052" | GPM | 0.06 | 0.07 | 0.09 | 0.10 | 0.13 | 0.18 | 0.21 |
| | | | | LPM | 0.23 | 0.26 | 0.34 | 0.38 | 0.49 | 0.68 | 0.79 |
| | HL1002SS | 2 | 0.086" | GPM | 0.14 | 0.17 | 0.19 | 0.20 | 0.27 | 0.38 | 0.46 |
| | | | | LPM | 0.53 | 0.64 | 0.72 | 0.76 | 1.02 | 1.44 | 1.74 |
| | HL1003SS | 3 | 0.109" | GPM | 0.20 | 0.24 | 0.28 | 0.32 | 0.45 | 0.63 | 0.77 |
| | | | | LPM | 0.76 | 0.91 | 1.06 | 1.21 | 1.70 | 2.38 | 2.91 |
| | HL1005SS | 5 | 0.120" | GPM | 0.27 | 0.35 | 0.39 | 0.49 | 0.65 | 0.91 | 1.12 |
| | | | | LPM | 1.02 | 1.32 | 1.47 | 1.85 | 2.46 | 3.44 | 4.23 |
| | HL1008SS | 8 | 0.166" | GPM | 0.46 | 0.59 | 0.73 | 0.80 | 1.16 | 1.60 | 2.04 |
| | | | | LPM | 1.74 | 2.23 | 2.76 | 3.02 | 4.38 | 6.05 | 7.71 |
| | HL1011SS | 11 | 0.180" | GPM | 0.65 | 0.81 | 0.93 | 1.10 | 1.47 | 2.03 | 2.50 |
| | | | | LPM | 2.46 | 3.06 | 3.52 | 4.16 | 5.56 | 7.67 | 9.45 |

### Spray Angle

| Inlet Pressure PSI | BAR | Width A in | A cm | B in | B cm | C in | C cm | |
|---|---|---|---|---|---|---|---|---|
| 7 | 0.5 | 4.8 | 12.3 | 6.1 | 15.5 | 7.8 | 19.8 | HL1001SS |
| 20 | 1.4 | 7.3 | 18.5 | 9.2 | 23.3 | 11.7 | 29.7 | |
| 60 | 4.1 | 12.1 | 30.8 | 15.3 | 38.8 | 19.5 | 49.5 | |
| 7 | 0.5 | 6.1 | 15.5 | 8.6 | 21.7 | 11.2 | 28.4 | HL1002SS |
| 20 | 1.4 | 9.2 | 23.3 | 12.8 | 32.6 | 16.8 | 42.6 | |
| 60 | 4.1 | 15.3 | 38.8 | 21.4 | 54.4 | 28.0 | 71.1 | |
| 7 | 0.5 | 6.8 | 17.2 | 10.4 | 26.5 | 13.3 | 33.9 | HL1003SS |
| 20 | 1.4 | 10.2 | 25.9 | 15.6 | 39.7 | 20.0 | 50.8 | |
| 60 | 4.1 | 17.0 | 43.1 | 26.1 | 66.2 | 33.3 | 84.6 | |
| 7 | 0.5 | 8.4 | 21.3 | 9.7 | 24.7 | 14.3 | 36.3 | HL1005SS |
| 20 | 1.4 | 12.6 | 32.0 | 14.6 | 37.0 | 21.5 | 54.5 | |
| 60 | 4.1 | 21.0 | 53.4 | 24.3 | 61.7 | 35.8 | 90.8 | |
| 7 | 0.5 | 7.1 | 18.0 | 7.8 | 19.8 | 10.1 | 25.6 | HL1008SS |
| 20 | 1.4 | 10.6 | 26.9 | 11.7 | 29.7 | 15.1 | 38.4 | |
| 60 | 4.1 | 17.7 | 44.9 | 19.5 | 49.5 | 25.2 | 63.9 | |
| 7 | 0.5 | 9.5 | 24.2 | 12.0 | 30.5 | 14.8 | 37.6 | HL1011SS |
| 20 | 1.4 | 14.3 | 36.4 | 18.0 | 45.7 | 22.2 | 56.5 | |
| 60 | 4.1 | 23.9 | 60.6 | 30.0 | 76.2 | 37.0 | 94.1 | |

## HollowStream™ Cone Nozzles – 3/8 NPT

**Model: HL3005SS**
**Material:** Type 303 Stainless Steel

**Model: HL3008SS**
**Material:** Type 303 Stainless Steel

**Model: HL3010SS**
**Material:** Type 303 Stainless Steel

**Model: HL3015SS**
**Material:** Type 303 Stainless Steel

**Model: HL3020SS**
**Material:** Type 303 Stainless Steel

**Model: HL3025SS**
**Material:** Type 303 Stainless Steel

**Model: HL3030SS**
**Material:** Type 303 Stainless Steel

Compared to EXAIR's Air Atomizing Spray Nozzles the HollowStream will have higher liquid flow rates.

For maximum liquid conservation and spray control visit Air Atomizing Nozzles on page 70.

**Model HL3005SS, HL3008SS, HL3010SS, HL3015SS, HL3020SS, HL3025SS and HL3030SS**
EXAIR's 3/8 NPT HollowStream Cone Nozzles produce a ring of liquid upon your target and are among the most common type of spray nozzles. Hollow cone spray nozzles generally use less liquid than full cone spray nozzles. These nozzles will be used for cooling, cleaning, washing, rinsing and dust suppression with less liquid than a full cone nozzle. Their tangential flow design is vaneless which creates wide open internal features to resist clogging. They produce a uniform distribution in a hollow cone round pattern and medium to large droplets. The right-angle design is compact and operates at up to 250 PSI liquid pressure. HollowStream nozzles work well with liquids containing particulate.

### Dimensions Spray Pattern

DOWNLOAD drawings at EXAIR.com

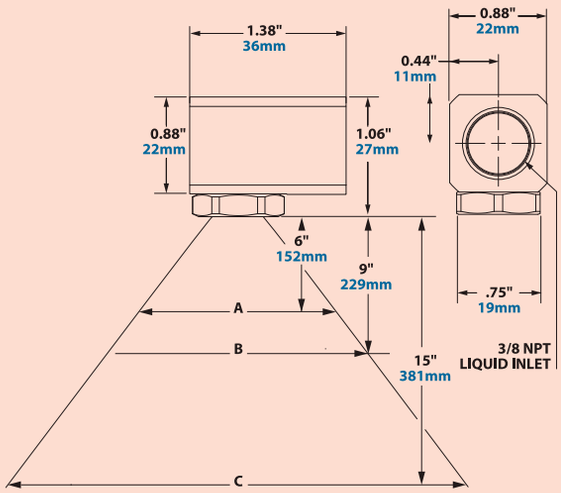


See page 98 for How the OmniStream and HollowStream Cone Nozzles Work.

3/8 NPT HollowStream nozzle lowers emissions inside of a gas scrubber.

Liquid Nozzles

**HollowStream Cone Nozzles**

| Inlet Connection | Model | Capacity | Max Free Passage | | Flow Rate GPM/LPM 3 PSI | 5 PSI | 7 PSI | 10 PSI | 20 PSI | 30 PSI | 40 PSI | 60 PSI |
|---|---|---|---|---|---|---|---|---|---|---|---|---|
| 3/8 NPT | HL3005SS | 5 | 0.111" | GPM | 0.29 | 0.34 | 0.39 | 0.45 | 0.62 | 0.75 | 0.86 | 1.04 |
| | | | | LPM | 1.11 | 1.30 | 1.48 | 1.71 | 2.35 | 2.83 | 3.25 | 3.95 |
| | HL3008SS | 8 | 0.159" | GPM | 0.50 | 0.60 | 0.71 | 0.82 | 1.12 | 1.33 | 1.50 | 1.80 |
| | | | | LPM | 1.88 | 2.28 | 2.68 | 3.09 | 4.25 | 5.04 | 5.68 | 6.80 |
| | HL3010SS | 10 | 0.172" | GPM | 0.64 | 0.75 | 0.89 | 1.01 | 1.36 | 1.62 | 1.83 | 2.47 |
| | | | | LPM | 2.42 | 2.84 | 3.36 | 3.81 | 5.16 | 6.13 | 6.93 | 9.35 |
| | HL3015SS | 15 | 0.166" | GPM | 0.94 | 1.10 | 1.29 | 1.48 | 1.98 | 2.60 | 2.80 | 3.60 |
| | | | | LPM | 3.54 | 4.16 | 4.88 | 5.60 | 7.48 | 9.84 | 10.60 | 13.63 |
| | HL3020SS | 20 | 0.203" | GPM | 1.28 | 1.50 | 1.81 | 2.00 | 2.75 | 3.39 | 3.92 | 4.53 |
| | | | | LPM | 4.86 | 5.69 | 6.86 | 7.57 | 10.41 | 12.84 | 14.83 | 17.13 |
| | HL3025SS | 25 | 0.219" | GPM | 1.45 | 1.78 | 2.02 | 2.45 | 3.34 | 4.00 | 4.52 | 5.40 |
| | | | | LPM | 5.49 | 6.75 | 7.63 | 9.27 | 12.65 | 15.14 | 17.10 | 20.44 |
| | HL3030SS | 30 | 0.281" | GPM | 1.80 | 2.30 | 2.68 | 3.10 | 4.23 | 5.13 | 6.03 | 7.28 |
| | | | | LPM | 6.81 | 8.71 | 10.13 | 11.73 | 15.99 | 19.40 | 22.81 | 27.54 |

**Spray Angle**

| Model | Inlet Pressure PSI | BAR | Width A in | A cm | B in | B cm | C in | C cm |
|---|---|---|---|---|---|---|---|---|
| HL3005SS | 7 | 0.5 | 10.1 | 25.6 | 15.1 | 38.4 | 25.2 | 63.9 |
| | 20 | 1.4 | 11.0 | 27.9 | 16.5 | 41.9 | 27.5 | 69.8 |
| | 60 | 4.1 | 11.8 | 30.0 | 17.7 | 44.9 | 29.5 | 74.9 |
| HL3008SS | 7 | 0.5 | 7.5 | 19.0 | 11.2 | 28.6 | 18.7 | 47.6 |
| | 20 | 1.4 | 8.4 | 21.3 | 12.6 | 32.0 | 21.0 | 53.4 |
| | 60 | 4.1 | 10.1 | 25.6 | 15.1 | 38.4 | 25.2 | 63.9 |
| HL3010SS | 7 | 0.5 | 8.4 | 21.3 | 12.6 | 32.0 | 21.0 | 53.4 |
| | 20 | 1.4 | 9.5 | 24.2 | 14.3 | 36.4 | 23.9 | 60.6 |
| | 60 | 4.1 | 10.4 | 26.5 | 15.6 | 39.7 | 26.1 | 66.2 |
| HL3015SS | 7 | 0.5 | 11.4 | 28.9 | 17.1 | 43.4 | 28.5 | 72.3 |
| | 20 | 1.4 | 13.1 | 33.3 | 19.6 | 49.9 | 32.7 | 83.2 |
| | 60 | 4.1 | 13.8 | 35.1 | 20.7 | 52.6 | 34.5 | 87.7 |
| HL3020SS | 7 | 0.5 | 11.4 | 28.9 | 17.1 | 43.4 | 28.5 | 72.3 |
| | 20 | 1.4 | 12.0 | 30.5 | 18.0 | 45.7 | 30.0 | 76.2 |
| | 60 | 4.1 | 13.1 | 33.3 | 19.6 | 49.9 | 32.7 | 83.2 |
| HL3025SS | 7 | 0.5 | 10.1 | 25.6 | 15.1 | 38.4 | 25.2 | 63.9 |
| | 20 | 1.4 | 11.0 | 27.9 | 16.5 | 41.9 | 27.5 | 69.8 |
| | 60 | 4.1 | 12.0 | 30.5 | 18.0 | 45.7 | 30.0 | 76.2 |
| HL3030SS | 7 | 0.5 | 8.2 | 20.9 | 12.4 | 31.4 | 20.6 | 52.4 |
| | 20 | 1.4 | 8.7 | 22.1 | 13.1 | 33.2 | 21.8 | 55.4 |
| | 60 | 4.1 | 10.1 | 25.6 | 15.1 | 38.4 | 25.2 | 63.9 |

# Liquid Atomizing Spray Nozzles

## HollowStream™ Cone Nozzles – 1/2 NPT

**Model: HL5025SS**
**Material:** Type 303 Stainless Steel

**Model: HL5030SS**
**Material:** Type 303 Stainless Steel

**Model: HL5040SS**
**Material:** Type 303 Stainless Steel

**Model: HL5050SS**
**Material:** Type 303 Stainless Steel

**Model: HL5060SS**
**Material:** Type 303 Stainless Steel

Liquid Nozzles

**Model HL5025SS, HL5030SS, HL5040SS, HL5050SS, HL5060SS**
EXAIR's 1/2 NPT HollowStream Cone Nozzles produce a ring of liquid upon your target and are among the most common type of spray nozzles. Hollow cone spray nozzles generally use less liquid than full cone spray nozzles. These nozzles will be used for cooling, cleaning, washing, rinsing and dust suppression with less liquid than a full cone nozzle. Their tangential flow design is vaneless which creates wide open internal features to resist clogging. They produce a uniform distribution in a hollow cone round pattern and medium to large droplets. The right-angle design is compact and operates at up to 250 PSI liquid pressure. HollowStream nozzles work well with liquids containing particulate.

### Dimensions and Spray Pattern

DOWNLOAD drawings at EXAIR.com

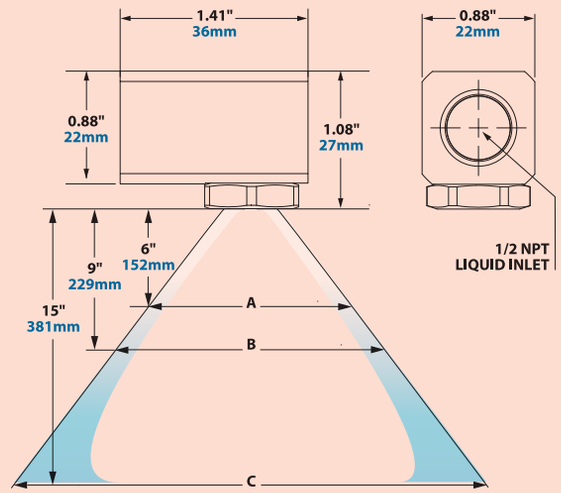


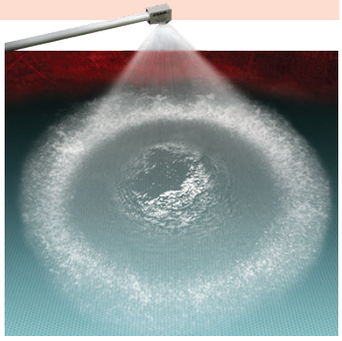

The precision machining of the HollowStream nozzle produces a controlled spray angle in this rinsing operation.

Compared to EXAIR's Air Atomizing Spray Nozzles the HollowStream will have higher liquid flow rates.

For maximum liquid conservation and spray control visit our Air Atomizing Nozzles on page 70.

**HollowStream Cone Nozzles**

| Inlet Connection | Model | Capacity | Max Free Passage | | Flow Rate GPM/LPM 3 PSI | 5 PSI | 7 PSI | 10 PSI | 20 PSI | 30 PSI | 40 PSI | 60 PSI |
|---|---|---|---|---|---|---|---|---|---|---|---|---|
| 1/2 NPT | HL5025SS | 25 | 0.281" | GPM | 1.60 | 1.90 | 2.40 | 2.50 | 3.70 | 4.40 | 4.80 | 6.00 |
| | | | | LPM | 6.06 | 7.19 | 9.08 | 9.46 | 14.01 | 16.66 | 18.17 | 22.71 |
| | HL5030SS | 30 | 0.313" | GPM | 1.90 | 2.20 | 2.50 | 3.00 | 4.20 | 5.00 | 5.60 | 7.00 |
| | | | | LPM | 7.19 | 8.33 | 9.46 | 11.36 | 15.90 | 18.93 | 21.20 | 26.50 |
| | HL5040SS | 40 | 0.344" | GPM | 2.40 | 2.80 | 3.20 | 3.90 | 5.20 | 6.20 | 6.80 | 8.20 |
| | | | | LPM | 9.08 | 10.60 | 12.11 | 14.76 | 19.68 | 23.47 | 25.74 | 31.04 |
| | HL5050SS | 50 | 0.344" | GPM | 3.20 | 3.80 | 4.60 | 5.00 | 6.80 | 7.90 | 9.00 | 12.50 |
| | | | | LPM | 12.11 | 14.38 | 17.41 | 18.93 | 25.74 | 29.90 | 34.07 | 47.32 |
| | HL5060SS | 60 | 0.344" | GPM | 3.60 | 4.20 | 5.40 | 6.00 | 7.80 | 9.20 | 11.50 | 14.00 |
| | | | | LPM | 13.63 | 15.90 | 20.44 | 22.71 | 29.53 | 34.83 | 43.53 | 53.00 |

**Spray Angle**

| Inlet Pressure PSI | BAR | Width A in | A cm | B in | B cm | C in | C cm | |
|---|---|---|---|---|---|---|---|---|
| 7 | 0.5 | 6.9 | 17.6 | 10.4 | 26.4 | 17.3 | 44.0 | HL5025SS |
| 20 | 1.4 | 7.5 | 19.0 | 11.2 | 28.6 | 18.7 | 47.6 | |
| 60 | 4.1 | 8.4 | 21.3 | 12.6 | 32.0 | 21.0 | 53.4 | |
| 7 | 0.5 | 8.4 | 21.3 | 12.6 | 32.0 | 21.0 | 53.4 | HL5030SS |
| 20 | 1.4 | 9.0 | 23.0 | 13.6 | 34.5 | 22.6 | 57.4 | |
| 60 | 4.1 | 10.1 | 25.6 | 15.1 | 38.4 | 25.2 | 63.9 | |
| 7 | 0.5 | 10.8 | 27.4 | 16.2 | 41.2 | 27.0 | 68.6 | HL5040SS |
| 20 | 1.4 | 12.0 | 30.5 | 18.0 | 45.7 | 30.0 | 76.2 | |
| 60 | 4.1 | 12.9 | 32.7 | 19.3 | 49.0 | 32.2 | 81.7 | |
| 7 | 0.5 | 13.8 | 35.1 | 20.7 | 52.6 | 34.5 | 87.7 | HL5050SS |
| 20 | 1.4 | 14.3 | 36.3 | 21.5 | 54.5 | 35.8 | 90.8 | |
| 60 | 4.1 | 15.4 | 39.0 | 23.0 | 58.5 | 38.4 | 97.5 | |
| 7 | 0.5 | 14.3 | 36.3 | 21.5 | 54.5 | 35.8 | 90.8 | HL5060SS |
| 20 | 1.4 | 17.1 | 43.5 | 25.7 | 65.3 | 43.8 | 111.4 | |
| 60 | 4.1 | 18.5 | 46.9 | 27.7 | 70.4 | 46.2 | 117.3 | |

## PowerStream™ Liquid Nozzles – 1/8 NPT


**Model: DL8025SS**
**Material:** Type 303 Stainless Steel

**Model: DL8030SS**
**Material:** Type 303 Stainless Steel

**Model: DL8040SS**
**Material:** Type 303 Stainless Steel

**Model: DL8050SS**
**Material:** Type 303 Stainless Steel

**Model: DL8075SS**
**Material:** Type 303 Stainless Steel

**Model DL8025SS, DL8030SS, DL8040SS, DL8050SS, DL8075SS**

EXAIR's 1/8 NPT PowerStream Liquid Nozzles provide a superior spraying solution for an extensive range of industrial processes and operates at up to 250 PSI liquid pressure. These processes include, but are not limited to, cooling, rinsing, washing, coating, and dust control. Designed to provide a uniform, deflected flat fan spray pattern, this nozzle ensures efficient liquid distribution that is consistent across the full width of spray. Its clog-resistant design makes it a perfect choice for environments dealing with particulates or potentially viscous fluids. Available in stainless steel, the PowerStream nozzle supports a variety of flow rates, allowing for flexible integration into existing systems, or for use in newly designed builds. Whether you need precise spray control or effective dust suppression, the PowerStream nozzle from EXAIR is engineered to meet your requirements with exceptional performance, repeatability and durability.

Compared to EXAIR's Air Atomizing Spray Nozzles the PowerStream will have higher liquid flow rates.

For maximum liquid conservation and spray control visit our Air Atomizing Nozzles on page 70.

### Dimensions and Spray Pattern

DOWNLOAD drawings at EXAIR.com

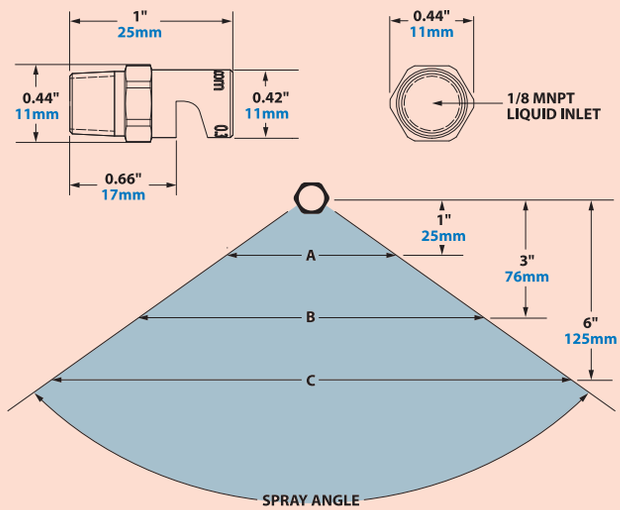


PowerStream Nozzles provide a superior spraying solution for an extensive range of industrial processes.

**PowerStream Nozzles**

| Inlet Connection | Model | Capacity | Max Free Passage | | Flow Rate GPM/LPM 3 PSI | 5 PSI | 7 PSI | 10 PSI | 20 PSI | 40 PSI | 60 PSI |
|---|---|---|---|---|---|---|---|---|---|---|---|
| 1/8 NPT | DL8025SS | 2.5 | 0.055" | GPM | 0.15 | 0.19 | 0.20 | 0.24 | 0.36 | 0.50 | 0.64 |
| | | | | LPM | 0.57 | 0.72 | 0.76 | 0.91 | 1.36 | 1.89 | 2.42 |
| | DL8030SS | 3 | 0.063" | GPM | 0.17 | 0.22 | 0.25 | 0.31 | 0.45 | 0.67 | 0.83 |
| | | | | LPM | 0.64 | 0.83 | 0.95 | 1.17 | 1.70 | 2.54 | 3.14 |
| | DL8040SS | 4 | 0.070" | GPM | 0.22 | 0.27 | 0.33 | 0.40 | 0.59 | 0.86 | 1.06 |
| | | | | LPM | 0.83 | 1.02 | 1.25 | 1.51 | 2.23 | 3.26 | 4.01 |
| | DL8050SS | 5 | 0.079" | GPM | 0.27 | 0.34 | 0.42 | 0.50 | 0.74 | 1.09 | 1.32 |
| | | | | LPM | 1.02 | 1.29 | 1.59 | 1.89 | 2.80 | 4.13 | 5.00 |
| | DL8075SS | 7.5 | 0.094" | GPM | 0.38 | 0.50 | 0.61 | 0.75 | 1.08 | 1.51 | 1.84 |
| | | | | LPM | 1.44 | 1.89 | 2.31 | 2.84 | 4.09 | 5.72 | 6.97 |

**Spray Angle**

| Inlet Pressure PSI | BAR | Spray Angle Degrees | Width A in | A cm | B in | B cm | C in | C cm | |
|---|---|---|---|---|---|---|---|---|---|
| 7 | 0.5 | 70 | 1.4 | 4 | 4.2 | 11 | 8.4 | 21 | DL8025SS |
| 20 | 1.4 | 80 | 1.7 | 4 | 5.0 | 13 | 10.1 | 26 | |
| 60 | 4.1 | 110 | 2.9 | 7 | 8.6 | 22 | 17.1 | 44 | |
| 7 | 0.5 | 80 | 1.7 | 4 | 5.0 | 13 | 10.1 | 26 | DL8030SS |
| 20 | 1.4 | 100 | 2.4 | 6 | 7.2 | 18 | 14.3 | 36 | |
| 60 | 4.1 | 105 | 2.6 | 7 | 7.8 | 20 | 15.6 | 40 | |
| 7 | 0.5 | 90 | 2.0 | 5 | 6.0 | 15 | 12.0 | 30 | DL8040SS |
| 20 | 1.4 | 110 | 2.9 | 7 | 8.6 | 22 | 17.1 | 44 | |
| 60 | 4.1 | 120 | 3.5 | 9 | 10.4 | 26 | 20.8 | 53 | |
| 7 | 0.5 | 120 | 3.5 | 9 | 10.4 | 26 | 20.8 | 53 | DL8050SS |
| 20 | 1.4 | 120 | 3.5 | 9 | 10.4 | 26 | 20.8 | 53 | |
| 60 | 4.1 | 130 | 4.3 | 11 | 12.9 | 33 | 25.7 | 65 | |
| 7 | 0.5 | 140 | 5.5 | 14 | 16.5 | 42 | 33.0 | 84 | DL8075SS |
| 20 | 1.4 | 140 | 5.5 | 14 | 16.5 | 42 | 33.0 | 84 | |
| 60 | 4.1 | 150 | 7.5 | 19 | 22.4 | 57 | 44.8 | 114 | |

# NEW BETE Hydraulic Nozzles

## Since 1950, over 30,000,000 BETE nozzles have sprayed in deep sea, deep space, and everywhere in between.

### What Makes BETE an Industry Leader in Spray Technology?

A pioneer and innovator in all areas of spray nozzle engineering, manufacturing, and application solutions, BETE improves spray processes worldwide for numerous markets, including food and beverage, petrochemical, chemical, waste management and pollution control. We manufacture tens of thousands of different products, including misting and fogging nozzles, tank cleaning nozzles, chemical injection nozzles, custom spray lances, fabrications and spraying systems. BETE integrates decades of experience in spray design and applications engineering with a CNC machine shop, foundry, and spray lab that enables in-house product design, manufacturing and testing to ensure the highest quality spray technology.

### Why is Selecting the Correct Spray Nozzle Important?

Spray nozzles may be relatively small components of large industrial processes, but incorporating the proper nozzles is critical to achieving peak system performance and efficiency. BETE's extensive catalog of hydraulic nozzles includes full cone, hollow cone, fan, misting, fogging, tank cleaning and automatic spray nozzles. These nozzles come in various sizes, connection types, flow rates, spray angles and materials. Whatever your spraying challenge, BETE has an efficient and effective solution to help optimize your process.

BETE Nozzles

### Applications

- Cleaning & Washing
- Dust Suppression
- Humidification
- Tank Cleaning
- Cooling
- Gas Conditioning
- Foam Control
- Vacuum Distillation
- Odor Control
- Chemical Injection
- Fire Protection
- Coating & Lubricating
- Moistening
- Flue Gas Desulfurization (FGD)

### Advantages

- Expertly Engineered
- Durable Construction
- High Efficiency
- Reliable Performance
- Save Resources
- Innovative Technology
- Optimize Processes
- Ready for Immediate Shipment

All weights and dimensions are approximate. Spray angle performance varies with pressure. Please contact EXAIR for specific data on critical applications.


For Technical Assistance, Call an EXAIR Application Engineer 1-800-903-9247
Toll Free FAX (866) 329-3924 • E-mail: techelp@exair.com • www.exair.com

## MicroWhirl ® (MW) Misting & Fogging Nozzles


**Series: MicroWhirl MW**
**Connection:** 1/8 Male NPT
**Spray Angle:** 70°
**Material:** 316 Stainless Steel

### MW Models

BETE MicroWhirl† nozzles offer outstanding fine mist or fog with a rugged, pinless design that ensures drip-free performance. They include a 70-micron polypropylene filter. A 200-mesh 316 Stainless Steel filter option is available as an alternative. A safety wire hole is also available for added security. The nozzle operates with a minimum pressure of 100 PSI (7 BAR) and delivers versatile spray performance, producing mist at lower pressures and fog at higher pressures. Droplets are typically small enough that buoyancy is significant compared to gravity, allowing drops to appear to float. In actuality, particles fall very slowly in the absence of upward airflow.

† Patent #7198201

### Dimensions

DOWNLOAD drawings at EXAIR.com

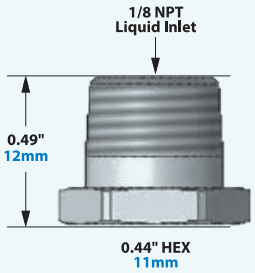


### How Swirl Misting Nozzles Work

BETE engineers patented the whirl fine misting nozzle in 2002. Misting and fogging spray nozzles traditionally use either an impingement or air-atomizing design to produce small droplets. Alternatively, whirl misting nozzles convert the fluid's head pressure into kinetic energy within a swirl chamber. The discharged fluid breaks up the droplets from the centrifugal force. MicroWhirl nozzles utilize a vortex to create a fine mist, increasing reliability and performance compared with traditional methods.

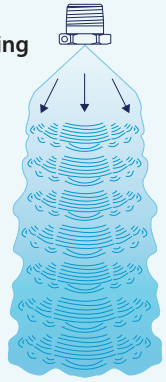

BETE Nozzles

Customers trust BETE's MicroWhirl misting nozzles for the finest hydraulic atomization, especially under critical conditions.

Ideal for cooling, humidification and complete evaporation.

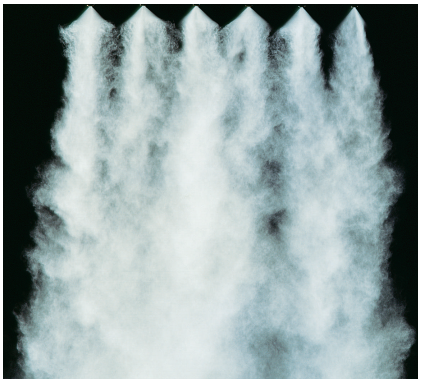

MicroWhirl misting nozzles produce outstanding atomization for humidification, air inlet cooling, dust suppression and more.

### MicroWhirl Flow Rates and Dimensions

**Pattern: Misting/ Fogging** **Spray Angle:** 70° **Connection:** 1/8 Male NPT **Material:** 316 SS

| Male Inlet Connection | Model | K Factor | Flow Rate (GPM @ PSI) 100 PSI | 300 PSI | 600 PSI | 1000 PSI | 1500 PSI | 2000 PSI | 2500 PSI | 3000 PSI | Wt (oz) |
|---|---|---|---|---|---|---|---|---|---|---|---|
| 1/8 NPT | 6094622 | 0.00085 | 0.009 | 0.015 | 0.021 | 0.027 | 0.033 | 0.038 | 0.043 | 0.047 | 0.25 |
| | 6109975 | 0.00275 | 0.028 | 0.048 | 0.067 | 0.087 | 0.107 | 0.123 | 0.138 | 0.151 | |
| | 6149734 | 0.00693 | 0.069 | 0.120 | 0.170 | 0.219 | 0.268 | 0.310 | 0.347 | 0.380 | |

Flow Rate GPM = K $\sqrt{PSI}$

### MicroWhirl Flow Rates and Dimensions

**Pattern: Misting/ Fogging** **Spray Angle:** 70° **Connection:** 1/8 Male NPT **Material:** 316 SS

| Male Inlet Connection | Model | K Factor | Flow Rate (L/min @ BAR) 7 BAR | 20 BAR | 40 BAR | 70 BAR | 100 BAR | 140 BAR | 170 BAR | 200 BAR | Wt (g) |
|---|---|---|---|---|---|---|---|---|---|---|---|
| 1/8 NPT | 6094622 | 0.01220 | 0.032 | 0.055 | 0.077 | 0.102 | 0.122 | 0.145 | 0.160 | 0.173 | 7.09 |
| | 6109975 | 0.03960 | 0.105 | 0.177 | 0.251 | 0.332 | 0.396 | 0.469 | 0.517 | 0.560 | |
| | 6149734 | 0.09988 | 0.264 | 0.447 | 0.632 | 0.836 | 0.999 | 1.182 | 1.302 | 1.413 | |

Flow Rate L/min = K $\sqrt{BAR}$

# Flat Fan Nozzles

## NF Standard Fan Nozzles

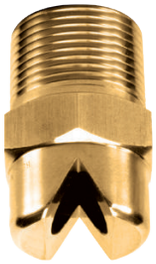

**Series: NF**
**Connections:** 1/8 - 3/8 Male NPT
**Spray Angles:** 30°, 65°, 80°, 120°
**Material:** Brass

### NF Models

The NF fan spray nozzle provides high-impact spray with evenly tapered edges, enabling effective overlapping of sprays for complete coverage. With a durable, one-piece construction and no internal parts, this nozzle is reliable and easy to maintain. Available in various male connection sizes, flow rates, and spray angles, the NF nozzle is the ideal solution for numerous industrial applications including coating, conveyor cleaning, and parts washing. NF flat spray nozzles produce medium to large-sized droplets that form a thin, sheet-like spray pattern.

The flat spray pattern optimizes a wide range of applications including surface cleaning, coating, high-impact washing and foam control.

BETE Nozzles

### Dimensions and Spray Pattern

DOWNLOAD drawings at EXAIR.com

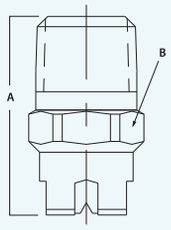


### How Flat Fan Nozzles Work

**As the fluid exits the nozzle's elliptical orifice, it is forced into a thin, flat sheet of fluid, producing a fan-like spray pattern.**

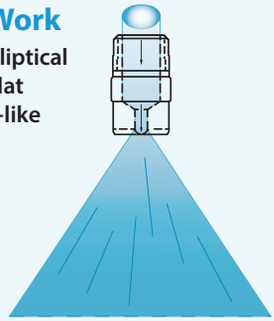

**NF Flow Rates** — **Pattern:** Fan **Spray Angles:** 30°, 65°, 80° and 120° **Connection:** 1/8-3/8 Male NPT **Material:** Brass

| Male Inlet Connection | Spray angle 30° | 65° | 80° | 120° | K Factor | Flow Rates (GPM @ PSI) 5 PSI | 10 PSI | 15 PSI | 20 PSI | 30 PSI | 40 PSI | 60 PSI | 80 PSI | 100 PSI | Equiv Orifice Dia (in)" |
|---|---|---|---|---|---|---|---|---|---|---|---|---|---|---|---|
| 1/8 NPT Model | 6011359 | 6017030 | 6003573 | 6013268 | 0.0791 | 0.18 | 0.25 | 0.31 | 0.35 | 0.43 | **0.50** | 0.61 | 0.71 | 0.79 | 0.057 |
| | 6011652 | 6011842 | 6006147 | 6013456 | 0.158 | 0.35 | 0.50 | 0.61 | 0.71 | 0.87 | **1.00** | 1.22 | 1.41 | 1.58 | 0.080 |
| | 6013109 | 6011261 | 6007832 | 6003609 | 0.316 | 0.71 | 1.00 | 1.22 | 1.41 | 1.73 | **2.00** | 2.45 | 2.83 | 3.16 | 0.109 |
| | 6013470 | 6011672 | 6008463 | 6003944 | 0.474 | 1.06 | 1.50 | 1.84 | 2.12 | 2.60 | **3.00** | 3.67 | 4.24 | 4.74 | 0.141 |
| 1/4 NPT Model | 6039856 | 6044390 | 6020398 | 6027632 | 0.0791 | 0.18 | 0.25 | 0.31 | 0.35 | 0.43 | **0.50** | 0.61 | 0.71 | 0.79 | 0.057 |
| | 6003572 | 6005653 | 6009320 | 6006482 | 0.158 | 0.35 | 0.50 | 0.61 | 0.71 | 0.87 | **1.00** | 1.22 | 1.41 | 1.58 | 0.080 |
| | 6020542 | 6003868 | 6009566 | 6005313 | 0.316 | 0.71 | 1.00 | 1.22 | 1.41 | 1.73 | **2.00** | 2.45 | 2.83 | 3.16 | 0.109 |
| | 6013112 | 6008836 | 6005921 | 6003113 | 0.474 | 1.06 | 1.50 | 1.84 | 2.12 | 2.60 | **3.00** | 3.67 | 4.24 | 4.74 | 0.141 |
| | 6004735 | 6010893 | 6009858 | 6014763 | 0.632 | 1.41 | 2.00 | 2.45 | 2.83 | 3.46 | **4.00** | 4.90 | 5.66 | 6.32 | 0.156 |
| | 6013265 | 6014774 | 6004072 | 6010699 | 0.791 | 1.77 | 2.50 | 3.06 | 3.54 | 4.33 | **5.00** | 6.12 | 7.07 | 7.91 | 0.172 |
| 3/8 NPT Model | 6008562 | 6007564 | 6008688 | 6011539 | 0.316 | 0.71 | 1.00 | 1.22 | 1.41 | 1.73 | **2.00** | 2.45 | 2.83 | 3.16 | 0.109 |
| | 6008312 | 6008326 | 6008706 | 6011280 | 0.474 | 1.06 | 1.50 | 1.84 | 2.12 | 2.60 | **3.00** | 3.67 | 4.24 | 4.74 | 0.141 |
| | 6008702 | 6002612 | 6003828 | 6011675 | 0.632 | 1.41 | 2.00 | 2.45 | 2.83 | 3.46 | **4.00** | 4.90 | 5.66 | 6.32 | 0.156 |
| | 6004093 | 6010885 | 6015429 | 6008709 | 0.791 | 1.77 | 2.50 | 3.06 | 3.54 | 4.33 | **5.00** | 6.12 | 7.07 | 7.91 | 0.172 |

Flow Rate GPM = K $\sqrt{PSI}$

**Dimensions for Metal Only (in)**

| Pipe Size | A | B | Wt (oz)Metal |
|---|---|---|---|
| 1/8" | 0.88 | 0.44 | 1.00 |
| 1/4" | 1.06 | 0.56 | 1.50 |
| 3/8" | 1.25 | 0.69 | 2.00 |

**NF Flow Rates** — **Pattern:** Fan **Spray Angles:** 30°, 65°, 80° and 120° **Connection:** 1/8-3/8 Male NPT **Material:** Brass

| Male Inlet Connection | Spray angle 30° | 65° | 80° | 120° | K Factor | Flow Rates (L/min @ BAR) 0.5 BAR | 0.7 BAR | 1 BAR | 2 BAR | 3 BAR | 5 BAR | Equiv Orifice Dia (mm) |
|---|---|---|---|---|---|---|---|---|---|---|---|---|
| 1/8 NPT Model | 6011359 | 6017030 | 6003573 | 6013268 | 1.14 | 0.81 | 0.95 | 1.14 | 1.61 | **1.97** | 2.55 | 1.45 |
| | 6011652 | 6011842 | 6006147 | 6013456 | 2.28 | 1.61 | 1.91 | 2.28 | 3.22 | **3.95** | 5.10 | 2.03 |
| | 6013109 | 6011261 | 6007832 | 6003609 | 4.56 | 3.22 | 3.81 | 4.56 | 6.45 | **7.89** | 10.2 | 2.78 |
| | 6013470 | 6011672 | 6008463 | 6003944 | 6.84 | 4.83 | 5.72 | 6.84 | 9.67 | **11.8** | 15.3 | 3.57 |
| 1/4 NPT Model | 6039856 | 6044390 | 6020398 | 6027632 | 1.14 | 0.81 | 0.95 | 1.14 | 1.61 | **1.97** | 2.55 | 1.45 |
| | 6003572 | 6005653 | 6009320 | 6006482 | 2.28 | 1.61 | 1.91 | 2.28 | 3.22 | **3.95** | 5.10 | 2.03 |
| | 6020542 | 6003868 | 6009566 | 6005313 | 4.56 | 3.22 | 3.81 | 4.56 | 6.45 | **7.89** | 10.2 | 2.78 |
| | 6013112 | 6008836 | 6005921 | 6003113 | 6.84 | 4.83 | 5.72 | 6.84 | 9.67 | **11.8** | 15.3 | 3.57 |
| | 6004735 | 6010893 | 6009858 | 6014763 | 9.12 | 6.45 | 7.63 | 9.12 | 12.9 | **15.8** | 20.4 | 3.97 |
| | 6013265 | 6014774 | 6004072 | 6010699 | 11.4 | 8.06 | 9.53 | 11.4 | 16.1 | **19.7** | 25.5 | 4.37 |
| 3/8 NPT Model | 6008562 | 6007564 | 6008688 | 6011539 | 4.56 | **3.22** | **3.81** | **4.56** | **6.45** | **7.89** | **1 0.2** | **2.78** |
| | 6008312 | 6008326 | 6008706 | 6011280 | 6.84 | **4.83** | **5.72** | **6.84** | **9.67** | **11.8** | **15.3** | **3.57** |
| | 6008702 | 6002612 | 6003828 | 6011675 | 9.12 | **6.45** | **7.63** | **9.12** | **12.9** | **15.8** | **20.4** | **3.97** |
| | 6004093 | 6010885 | 6015429 | 6008709 | 11.4 | **8.06** | **9.53** | **11.4** | **16.1** | **19.7** | **25.5** | **4.37** |

Flow Rate L/min = K $\sqrt{BAR}$

**Dimensions for Metal Only (mm)**

| Pipe Size | A | B | Wt (g) Metal |
|---|---|---|---|
| 1/8" | 22.2 | 11.1 | 28.4 |
| 1/4" | 27.0 | 14.3 | 42.5 |
| 3/8" | 31.8 | 17.5 | 56.7 |

## TF Full Cone Spray Nozzles

**Series: TF**
**Connections:** 1/4 - 1 Male NPT
**Spray Angles:** 60°, 90°, 120°
**Material:** Brass

### TF Models

BETE is the original inventor of the spiral, also known as a pigtail, corkscrew, or helix nozzle. Its durable, one-piece design with no internal parts delivers clog-resistant performance and high energy efficiency. When compared to whirl-type nozzles of the same flow rate, pressure drop, and angle, TF spirals produce considerably smaller droplet sizes for fine atomization.

## Dimensions and Spray Pattern

DOWNLOAD drawings at EXAIR.com

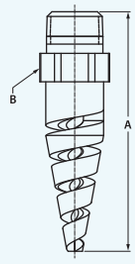


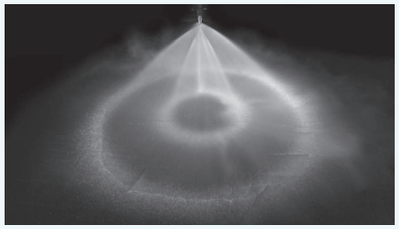

90°, 120°, 60° nozzles are slightly longer. For dimensions, contact EXAIR.

## How Full Cone Spirals Work

**The spiral nozzle pattern is created by fluid shearing along the spiral's turns, creating multiple concentric hollow cones. This design produces two to three bands of coarser droplets, each surrounded by wider bands of finer droplets, resulting in full coverage.**

BETE Nozzles

Numerous industries rely on BETE TF full cone spray nozzles for their gas cooling, quenching or chemical injection applications.

Its durable, one-piece design is clog resistant and requires minimal maintenance.

### TF Full Cone Flow Rates and Dimensions

**Pattern:** Full Cone **Spray Angles:** 60°, 90°, 120° **Connection:** 1/4 - 1 Male NPT **Material:** Brass

| Male Inlet Connection | Available Spray Angles 60° | 90° | 120° | K Factor | Flow Rate (GPM @ PSI) 5 PSI | 10 PSI | 20 PSI | 30 PSI | 40 PSI | 50 PSI | 60 PSI | 80 PSI | 100 PSI | Approx Orifice Dia (in) | Approx Free Passage Dia (in) | A | B | Wt (oz) Metal |
|---|---|---|---|---|---|---|---|---|---|---|---|---|---|---|---|---|---|---|
| 1/4 NPT Model | 6015283 | 6013583 | 6013407 | 0.221 | 0.495 | 0.70 | 0.99 | 1.21 | **1.40** | 1.57 | 1.71 | 1.98 | 2.21 | 0.09 | 0.09 | 1.88 | 0.56 | 1.25 |
| | 6009295 | 6003058 | 6016084 | 0.411 | 0.919 | 1.30 | 1.84 | 2.25 | **2.60** | 2.91 | 3.18 | 3.68 | 4.11 | 0.13 | 0.13 | | | |
| | 6005350 | 6013392 | 6010125 | 0.632 | 1.41 | 2.00 | 2.83 | 3.46 | **4.00** | 4.47 | 4.90 | 5.66 | 6.32 | 0.16 | 0.13 | | | |
| 3/8 NPT Model | 6011546 | 6012770 | 6012736 | 0.949 | 2.12 | 3.00 | 4.24 | 5.20 | **6.00** | 6.71 | 7.35 | 8.49 | 9.49 | 0.19 | 0.13 | 1.88 | 0.69 | 1.63 |
| | 6015134 | 6010116 | 6012832 | 1.28 | 2.86 | 4.05 | 5.73 | 7.01 | **8.10** | 9.06 | 9.92 | 11.5 | 12.8 | 0.22 | | | | |
| | 6006217 | 6012073 | 6005617 | 1.68 | 3.75 | 5.30 | 7.50 | 9.18 | **10.6** | 11.9 | 13.0 | 15.0 | 16.8 | 0.25 | | | | |
| | 6009079 | 6011877 | 6003941 | 2.61 | 5.83 | 8.25 | 11.7 | 14.3 | **16.5** | 18.4 | 20.2 | 23.3 | 26.1 | 0.31 | | | | |
| 1/2 NPT Model | 6007586 | 6013307 | 6007059 | 3.81 | 8.52 | 12.1 | 17 | 20.9 | **24.1** | 26.9 | 29.5 | 34.1 | 38.1 | 0.38 | 0.19 | 2.5 | 0.88 | 3.00 |
| | 6002504 | 6005485 | 6016180 | 5.22 | 11.7 | 16.5 | 23.3 | 28.6 | **33.0** | 36.9 | 40.4 | 46.7 | 52.2 | 0.44 | | | | |
| 3/4 NPT Model | 6003090 | 6010373 | 6013110 | 6.64 | 14.8 | 21.0 | 29.7 | 36.4 | **42.0** | 47.0 | 51.4 | 59.4 | 66.4 | 0.50 | 0.19 | 2.75 | 1.13 | 5.50 |
| 1 NPT Model | 6012340 | 6016360 | 6016286 | 10.6 | 23.7 | 33.5 | 47.4 | 58.0 | **67.0** | 74.9 | 82.1 | 94.8 | 106 | 0.63 | 0.25 | 3.63 | 1.38 | 8.50 |

Flow Rate GPM = K $\sqrt{PSI}$

### TF Full Cone Flow Rates and Dimensions

**Pattern:** Full Cone **Spray Angles:** 60°, 90°, 120° **Connection:** 1/4 - 1 Male NPT **Material:** Brass

| Male Inlet Connection | Available Spray Angles 60° | 90° | 120° | K Factor | Flow Rate (L/min @ BAR) 0.5 BAR | 0.7 BAR | 1 BAR | 2 BAR | 3 BAR | 5 BAR | Approx Orifice Dia (mm) | Approx Free Passage Dia (mm) | A | B | Wt (g) Metal |
|---|---|---|---|---|---|---|---|---|---|---|---|---|---|---|---|
| 1/4 NPT Model | 6015283 | 6013583 | 6013407 | 3.19 | 2.26 | 2.67 | 3.19 | 4.50 | **5.50** | 7.10 | 2.38 | 2.38 | 47.6 | 14.3 | 35.0 |
| | 6009295 | 6003058 | 6016084 | 5.93 | 4.19 | 4.96 | 5.93 | 8.4 | **10.3** | 13.2 | 3.18 | 3.18 | | | |
| | 6005350 | 6013392 | 6010125 | 9.12 | 6.45 | 7.63 | 9.12 | 12.9 | **15.8** | 20.4 | 3.97 | 3.18 | | | |
| 3/8 NPT Model | 6011546 | 6012770 | 6012736 | 13.7 | 9.67 | 11.4 | 13.7 | 19.3 | **23.7** | 30.6 | 4.76 | 3.18 | 47.6 | 17.5 | 46.0 |
| | 6015134 | 6010116 | 6012832 | 18.5 | 13.1 | 15.4 | 18.5 | 26.1 | **32.0** | 41.3 | 5.56 | | | | |
| | 6006217 | 6012073 | 6005617 | 24.2 | 17.1 | 20.2 | 24.2 | 34.2 | **41.8** | 54.0 | 6.35 | | | | |
| | 6009079 | 6011877 | 6003941 | 37.6 | 26.6 | 31.5 | 37.6 | 53.2 | **65.1** | 84.1 | 7.94 | | | | |
| 1/2 NPT Model | 6007586 | 6013307 | 6007059 | 54.9 | 38.8 | 46.0 | 54.9 | 77.7 | **95.1** | 123 | 9.53 | 4.76 | 63.5 | 22.2 | 85.0 |
| | 6002504 | 6005485 | 6016180 | 75.2 | 53.2 | 62.9 | 75.2 | 106 | **130** | 168 | 11.1 | | | | |
| 3/4 NPT Model | 6003090 | 6010373 | 6013110 | 95.7 | 67.7 | 80.1 | 95.7 | 135 | **166** | 214 | 12.7 | 4.76 | 69.9 | 28.6 | 156 |
| 1 NPT Model | 6012340 | 6016360 | 6016286 | 153 | 108 | 128 | 153 | 216 | **264** | 341 | 15.9 | 6.35 | 92.1 | 34.9 | 241 |

Flow Rate L/min = K $\sqrt{BAR}$

# Full Cone Nozzles

## MaxiPass® (MP) Maximum Free Passage Nozzles

**Series: MaxiPass (MP)**
**Connections:** 3/8 - 3/4 Male NPT
**Spray Angles:** 60°, 90°, 120°
**Materials:** 316 Stainless Steel
Polypropylene available for specific models (90°, 120° Only)

### MP Models

The patented† MaxiPass design features maximum free passage for ultimate clog resistance compared to other whirl-type nozzles. This ensures high energy efficiency and reliable performance, even with dirty or lumpy liquids. Unlike conventional X-vane nozzles, the MP is engineered with two unique S-shaped internal vanes to maximize free passage, making this nozzle highly dependable under even the most challenging conditions. MP nozzles achieve atomization by swirling the water internally through its vanes before exiting through the orifice, producing medium to coarse droplet sizes. Its spray pattern is more uniform than that of spiral nozzles, providing consistent coverage across applications.

† Patent #4014470

### Dimensions and Spray Pattern

DOWNLOAD drawings at EXAIR.com

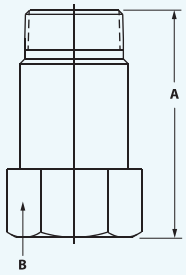


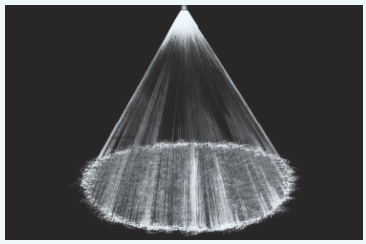

### How Full Cone Nozzles Work

**The full cone axial spray nozzle with internal vanes produces a uniform conical spray pattern with complete coverage. As the liquid passes through the vanes, it is stabilized and evenly distributed before exiting the nozzle's orifice.**

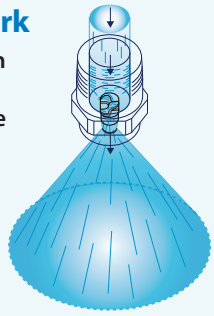

The MP is the leading spray solution for process critical applications such as gas scrubbing, cooling, foam control and vacuum distillation.

Alloy MP nozzles are cast in BETE's U.S. foundry, ensuring high-quality, durable construction.

### MaxiPass Flow Rates and Dimensions

**Pattern:** Full Cone **Spray Angles:** 60°, 90°, 120° **Connection:** 3/8, 1/2, 3/4 NPT **Material:** 316 SS, Polypropylene (Specific 90°, 120° Models Only)

| Male Inlet Connection | Material | Available Spray Angles 60° | 90° | 120° | K Factor | Flow Rate (GPM @ PSI) 3 PSI | 5 PSI | 7 PSI | 10 PSI | 15 PSI | 20 PSI | 30 PSI | 40 PSI | Approx Free Passage Dia (in) | Approx Dim (in) Overall Length (Max) A (60°) | A (90°) | A (120°) | B | Wt (lbs) Metal | Wt (lbs) Polypro |
|---|---|---|---|---|---|---|---|---|---|---|---|---|---|---|---|---|---|---|---|---|
| 3/8 NPT Model | Polypropylene | -- | 6182995 | 6186144 | 0.416 | 0.70 | 0.89 | 1.04 | 1.23 | 1.49 | **1.70** | 2.06 | 2.35 | 0.125 | 1.50 | 1.50 | 1.50 | 0.88 | 0.19 | .017 |
| | 316SS | 6003212 | 6002739 | 6011935 | 0.661 | 1.11 | 1.41 | 1.65 | 1.95 | 2.36 | **2.70** | 3.27 | 3.74 | 0.156 | | | | | | |
| 3/8 NPT Model | Polypropylene | -- | 6174330 | 6181241 | 0.954 | 1.60 | 2.03 | 2.38 | 2.82 | 3.41 | **3.90** | 4.72 | 5.40 | 0.188 | 1.88 | 1.88 | 1.88 | 1.00 | 0.28 | .023 |
| | 316SS | 6008635 | 6011682 | 6016565 | 1.71 | 2.87 | 3.65 | 4.27 | 5.05 | 6.11 | **7.00** | 8.47 | 9.70 | 0.250 | | | | | 0.25 | |
| 3/4 NPT Model | 316SS | 6009757 | 6008929 | 6016672 | 2.54 | 4.26 | 5.42 | 6.35 | 7.51 | 9.08 | **10.4** | 12.6 | 14.4 | 0.312 | 2.50 | 2.50 | 2.50 | 1.25 | 0.50 | .246 |
| | | 6014786 | 6008945 | 6010643 | 3.67 | 6.15 | 7.82 | 9.16 | 10.8 | 13.1 | **15.0** | 18.1 | 20.8 | 0.375 | | | | | 0.44 | |

Flow Rate GPM = K (PSI) 0.47

### MaxiPass Flow Rates and Dimensions

**Pattern:** Full Cone **Spray Angles:** 60°, 90°, 120° **Connection:** 3/8, 1/2, 3/4 NPT **Material:** 316 SS, Polypropylene (Specific 90°, 120° Models Only)

| Male Inlet Connection | Material | Available Spray Angles 60° | 90° | 120° | K Factor | Flow Rate (L/min @BAR) 0.2 BAR | 0.3 BAR | 0.5 BAR | 0.7 BAR | 1 BAR | 2 BAR | Approx Free Passage Dia (mm) | Approx Dim (mm) Overall Length (Max) A (60°) | A (90°) | A (120°) | B | Wt (kg) Metal | Wt (kg) Polypro |
|---|---|---|---|---|---|---|---|---|---|---|---|---|---|---|---|---|---|---|
| 3/8 NPT Model | Polypropylene | -- | 6182995 | 6186144 | 5.53 | 2.6 | 3.14 | 3.99 | 4.68 | **5.53** | 7.66 | 3.18 | 38.1 | 38.1 | 38.1 | 22.2 | 0.09 | .008 |
| | 316SS | 6003212 | 6002739 | 6011935 | 8.79 | 4.13 | 4.99 | 6.35 | 7.43 | **8.79** | 12.2 | 3.97 | | | | | | |
| 3/8 NPT Model | Polypropylene | -- | 6174330 | 6181241 | 12.7 | 5.96 | 7.21 | 9.17 | 10.7 | **12.7** | 17.6 | 4.76 | 47.6 | 47.6 | 47.6 | 25.4 | 0.13 | .010 |
| | 316SS | 6008635 | 6011682 | 6016565 | 22.7 | 10.7 | 12.9 | 16.4 | 19.2 | **22.7** | 31.4 | 6.35 | | | | | 0.11 | |
| 3/4 NPT Model | 316SS | 6009757 | 6008929 | 6016672 | 33.8 | 15.9 | 19.2 | 24.4 | 28.6 | **33.8** | 46.8 | 7.94 | 63.5 | 60.3 | 63.5 | 31.8 | 0.23 | .112 |
| | | 6014786 | 6008945 | 6010643 | 48.8 | 22.9 | 27.7 | 35.2 | 41.3 | **48.8** | 67.6 | 9.53 | | | | | 0.20 | |

Flow Rate L/min = K (BAR) 0.47


For Technical Assistance, Call an EXAIR Application Engineer 1-800-903-9247
Toll Free FAX (866) 329-3924 • E-mail: techelp@exair.com • www.exair.com

## WL Full Cone Nozzle

**Series: WL**
**Connections:** 1/8 - 3/8 Male NPT
**Spray Angles:** 60° (3/8 NPT only), 90°, 120°
**Material:** Brass

### WL Models

BETE's WL spray nozzle uses a whirl plate design to ensure uniform coverage at a low flow rate. Atomization occurs as water is spun within the nozzle before exiting through the orifice, producing medium to coarse droplets. This design produces a more uniform spray pattern compared to spiral nozzles, making it ideal for applications that demand consistent and precise coverage. These applications include washing, cooling, distribution and foam control.

### Dimensions and Spray Pattern

DOWNLOAD drawings at EXAIR.com

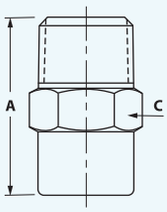


Male Metal

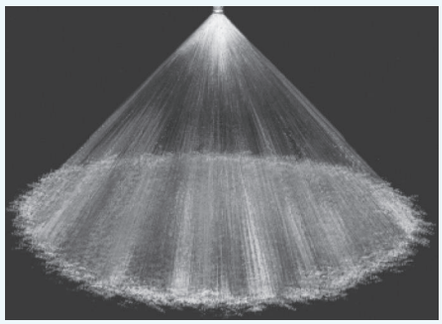

### How Full Cone Nozzles Work

**The full cone axial spray nozzle with internal vanes produces a uniform conical spray pattern with complete coverage. As the liquid passes through the vanes, it is stabilized and evenly distributed before exiting the nozzle's orifice.**

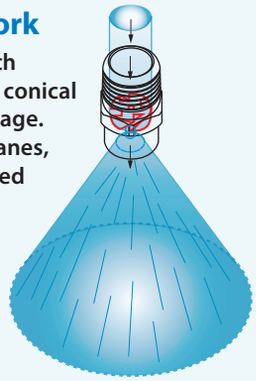

BETE Nozzles

Great for lower flow applications requiring medium to coarse spray atomization and uniform coverage.

For higher flow rates, please see the MaxiPass® full cone nozzle on page 110.

### WL Flow Rates and Dimensions

**Pattern:** Full Cone **Spray Angles:** 60°, 90°, 120° **Connection:** 1/8- 3/8 Male NPT **Material:** Brass

| Male Inlet Connection | Available Spray Angles 60° | 90° | 120° | K Factor | Flow Rate (GPM @ PSI) 10 PSI | 20 PSI | 30 PSI | 40 PSI | 60 PSI | 80 PSI | 100 PSI |
|---|---|---|---|---|---|---|---|---|---|---|---|
| 1/8 NPT Model | -- | 6006349 | 6002104 | 0.044 | 0.13 | 0.18 | 0.22 | **0.25** | 0.30 | 0.35 | 0.38 |
| | -- | 6004759 | 6005880 | 0.088 | 0.26 | 0.36 | 0.44 | **0.50** | 0.60 | 0.69 | 0.77 |
| | -- | 6014113 | 6006821 | 0.132 | 0.39 | 0.54 | 0.66 | **0.75** | 0.91 | 1.04 | 1.15 |
| 1/4 NPT Model | -- | 6000279 | 6009470 | 0.177 | 0.52 | 0.72 | 0.87 | **1.00** | 1.21 | 1.39 | 1.54 |
| | -- | 6000516 | 6004357 | 0.265 | 0.78 | 1.08 | 1.31 | **1.50** | 1.81 | 2.08 | 2.31 |
| 3/8 NPT Model | -- | 6016721 | 6014032 | 0.353 | 1.04 | 1.44 | 1.75 | **2.00** | 2.42 | 2.77 | 3.08 |
| | 6019124 | 6012173 | 6008750 | 0.530 | 1.56 | 2.17 | 2.62 | **3.00** | 3.63 | 4.16 | 4.61 |
| | 6036152 | 6011559 | 6001862 | 0.706 | 2.08 | 2.89 | 3.49 | **4.00** | 4.84 | 5.54 | 6.15 |

Flow Rate GPM = K (PSI) 0.47

### Dimensions for Metal Only (in)

| Approx Orifice Dia (in) | A | C | Wt (oz) Metal |
|---|---|---|---|
| 0.043 | 0.88 | 0.44 | 1.00 |
| 0.055 | | | |
| 0.072 | | | |
| 0.082 | 1.06 | 0.56 | 1.50 |
| 0.109 | | | |
| 0.125 | 1.25 | 0.69 | 2.00 |
| 0.156 | | | |
| 0.188 | | | |

### WL Flow Rates and Dimensions

**Pattern:** Full Cone **Spray Angles:** 60°, 90°, 120° **Connection:** 1/8- 3/8 Male NPT **Material:** Brass

| Male Inlet Connection | Available Angles 60° | 90° | 120° | K Factor | Flow Rate (L/min @ BAR) 0.7 BAR | 1 BAR | 2 BAR | 3 BAR | 5 BAR | 10 BAR |
|---|---|---|---|---|---|---|---|---|---|---|
| 1/8 NPT Model | -- | 6006349 | 6002104 | 0.587 | 0.497 | 0.587 | 0.814 | **0.984** | 1.25 | 1.73 |
| | -- | 6004759 | 6005880 | 1.17 | 0.993 | 1.17 | 1.63 | **1.97** | 2.50 | 3.47 |
| | -- | 6014113 | 6006821 | 1.76 | 1.49 | 1.76 | 2.44 | **2.95** | 3.75 | 5.20 |
| 1/4 NPT Model | -- | 6000279 | 6009470 | 2.35 | 1.99 | 2.35 | 3.25 | **3.94** | 5.01 | 6.93 |
| | -- | 6000516 | 6004357 | 3.52 | 2.98 | 3.52 | 4.88 | **5.91** | 7.51 | 10.4 |
| 3/8 NPT Model | -- | 6016721 | 6014032 | 4.70 | 3.97 | 4.70 | 6.51 | **7.87** | 10.0 | 13.9 |
| | 6019124 | 6012173 | 6008750 | 7.05 | 5.96 | 7.05 | 9.76 | **11.8** | 15.0 | 20.8 |
| | 6036152 | 6011559 | 6001862 | 9.40 | 7.95 | 9.40 | 13.0 | **15.7** | 20.0 | 27.7 |

Flow Rate L/min = K (BAR) 0.47

### Dimensions for Metal Only (mm)

| Approx Orifice Dia (mm) | A | C | Wt (g) Metal |
|---|---|---|---|
| 1.09 | 22.2 | 11.1 | 28.4 |
| 1.40 | | | |
| 1.83 | | | |
| 2.08 | 27.0 | 14.2 | 45.5 |
| 2.77 | | | |
| 3.18 | 31.8 | 17.5 | 56.7 |
| 3.96 | | | |
| 4.78 | | | |

# Full Cone Nozzles

## MaxiPass® (MP) Maximum Free Passage Nozzles

**Series: MaxiPass (MP)**
**Connections:** 3/8 - 3/4 Male NPT
**Spray Angles:** 60°, 90°, 120°
**Materials:** 316 Stainless Steel
Polypropylene available for specific models (90°, 120° Only)

### MP Models

The patented† MaxiPass design features maximum free passage for ultimate clog resistance compared to other whirl-type nozzles. This ensures high energy efficiency and reliable performance, even with dirty or lumpy liquids. Unlike conventional X-vane nozzles, the MP is engineered with two unique S-shaped internal vanes to maximize free passage, making this nozzle highly dependable under even the most challenging conditions. MP nozzles achieve atomization by swirling the water internally through its vanes before exiting through the orifice, producing medium to coarse droplet sizes. Its spray pattern is more uniform than that of spiral nozzles, providing consistent coverage across applications.

† Patent #4014470

### Dimensions and Spray Pattern

DOWNLOAD drawings at EXAIR.com

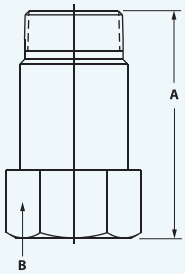


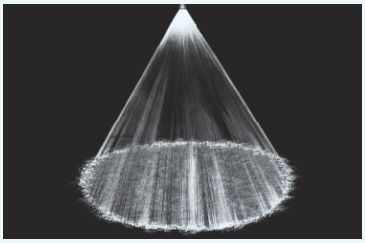

### How Full Cone Nozzles Work

**The full cone axial spray nozzle with internal vanes produces a uniform conical spray pattern with complete coverage. As the liquid passes through the vanes, it is stabilized and evenly distributed before exiting the nozzle's orifice.**

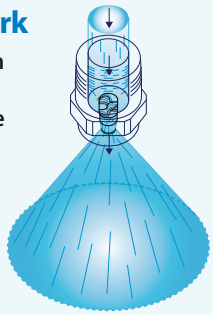

BETE Nozzles

The MP is the leading spray solution for process critical applications such as gas scrubbing, cooling, foam control and vacuum distillation.

Alloy MP nozzles are cast in BETE's U.S. foundry, ensuring high-quality, durable construction.

### MaxiPass Flow Rates and Dimensions

**Pattern:** Full Cone **Spray Angles:** 60°, 90°, 120° **Connection:** 3/8, 1/2, 3/4 NPT **Material:** 316 SS, Polypropylene (Specific 90°, 120° Models Only)

| Male Inlet Connection | Material | Available Spray Angles | | | K Factor | Flow Rate (GPM @ PSI) | | | | | | | | Approx Free Passage Dia (in) | Approx Dim (in) Overall Length (Max) | | | B | Wt (lbs) Metal | Wt (lbs) Polypro |
|---|---|---|---|---|---|---|---|---|---|---|---|---|---|---|---|---|---|---|---|---|
| | | 60° | 90° | 120° | | 3 PSI | 5 PSI | 7 PSI | 10 PSI | 15 PSI | 20 PSI | 30 PSI | 40 PSI | | A (60°) | A (90°) | A (120°) | | | |
| 3/8 NPT Model | Polypropylene | -- | **6182995** | **6186144** | 0.416 | 0.70 | 0.89 | 1.04 | 1.23 | 1.49 | **1.70** | 2.06 | 2.35 | 0.125 | 1.50 | 1.50 | 1.50 | 0.88 | 0.19 | .017 |
| | 316SS | **6003212** | **6002739** | **6011935** | 0.661 | 1.11 | 1.41 | 1.65 | 1.95 | 2.36 | **2.70** | 3.27 | 3.74 | 0.156 | | | | | | |
| 1/2 NPT Model | Polypropylene | -- | **6164563** | **6185953** | 0.954 | 1.60 | 2.03 | 2.38 | 2.82 | 3.41 | **3.90** | 4.72 | 5.40 | 0.188 | 1.88 | 1.88 | 1.88 | 1.00 | 0.28 | .023 |
| | 316SS | **6006652** | **6014543** | **6015833** | 1.71 | 2.87 | 3.65 | 4.27 | 5.05 | 6.11 | **7.00** | 8.47 | 9.70 | 0.250 | | | | | 0.25 | |
| 3/4 NPT Model | 316SS | **6009757** | **6008929** | **6016672** | 2.54 | 4.26 | 5.42 | 6.35 | 7.51 | 9.08 | **10.4** | 12.6 | 14.4 | 0.312 | 2.50 | 2.50 | 2.50 | 1.25 | 0.50 | .246 |
| | | **6014786** | **6008945** | **6010643** | 3.67 | 6.15 | 7.82 | 9.16 | 10.8 | 13.1 | **15.0** | 18.1 | 20.8 | 0.375 | | | | | 0.44 | |

Flow Rate GPM = K (PSI) 0.47

### MaxiPass Flow Rates and Dimensions

**Pattern:** Full Cone **Spray Angles:** 60°, 90°, 120° **Connection:** 3/8, 1/2, 3/4 NPT **Material:** 316 SS, Polypropylene (Specific 90°, 120° Models Only)

| Male Inlet Connection | Material | Available Spray Angles | | | K Factor | Flow Rate (L/min @BAR) | | | | | | Approx Free Passage Dia (mm) | Approx Dim (mm) Overall Length (Max) | | | B | Wt (kg) Metal | Wt (kg) Polypro |
|---|---|---|---|---|---|---|---|---|---|---|---|---|---|---|---|---|---|---|
| | | 60° | 90° | 120° | | 0.2 BAR | 0.3 BAR | 0.5 BAR | 0.7 BAR | 1 BAR | 2 BAR | | A (60°) | A (90°) | A (120°) | | | |
| 3/8 NPT Model | Polypropylene | -- | **6182995** | **6186144** | 5.53 | 2.6 | 3.14 | 3.99 | 4.68 | **5.53** | 7.66 | 3.18 | 38.1 | 38.1 | 38.1 | 22.2 | 0.09 | .008 |
| | 316SS | **6003212** | **6002739** | **6011935** | 8.79 | 4.13 | 4.99 | 6.35 | 7.43 | **8.79** | 12.2 | 3.97 | | | | | | |
| 1/2 NPT Model | Polypropylene | -- | **6164563** | **6185953** | 12.7 | 5.96 | 7.21 | 9.17 | 10.7 | **12.7** | 17.6 | 4.76 | 47.6 | 47.6 | 47.6 | 25.4 | 0.13 | .010 |
| | 316SS | **6006652** | **6014543** | **6015833** | 22.7 | 10.7 | 12.9 | 16.4 | 19.2 | **22.7** | 31.4 | 6.35 | | | | | 0.11 | |
| 3/4 NPT Model | 316SS | **6009757** | **6008929** | **6016672** | 33.8 | 15.9 | 19.2 | 24.4 | 28.6 | **33.8** | 46.8 | 7.94 | 63.5 | 60.3 | 63.5 | 31.8 | 0.23 | .112 |
| | | **6014786** | **6008945** | **6010643** | 48.8 | 22.9 | 27.7 | 35.2 | 41.3 | **48.8** | 67.6 | 9.53 | | | | | 0.20 | |

Flow Rate L/min = K (BAR) 0.47


For Technical Assistance, Call an EXAIR Application Engineer 1-800-903-9247
Toll Free FAX (866) 329-3924 • E-mail: techelp@exair.com • www.exair.com

## HydroWhirl® Stinger (HWS2) & HydroWhirl® Mini (HWM)

**Series: HydroWhirl Stinger (HWS)**
**Materials:** 316L Stainless Steel, Ceramic Bearings

**Series: HydroWhirl Mini (HWM)**
**Materials:** 316L Stainless Steel, PEEK Slide-Bearing

### HWS Models

This compact, rotating tank cleaning nozzle is made from FDA-compliant 316L Stainless Steel and has a 32 Ra surface finish, making it ideal for many sanitary applications. The HWS2's patent-pending, no-weld design features Zirconia ceramic bearings for extended service life and extreme chemical resistance. Suitable for small to medium-sized tanks, it produces vigorous spray action with complete 360° spray coverage.

### HWM Models

A fluid-driven, self-flushing compact rotary tank cleaning nozzle made from FDA-compliant 316L Stainless Steel with PEEK slide bearings for greater longevity and minimal maintenance. Suitable for small tanks up to 6.5 ft (2 m) in diameter, this compact nozzle creates vigorous spray action with complete 360° spray coverage.

BETE's rotating tank washing nozzles deliver up to 40% water savings compared to traditional static spray balls.

Rotational tank cleaning devices offer precise and reliable cleaning to prevent batch contamination.

## Dimensions

DOWNLOAD drawings at EXAIR.com

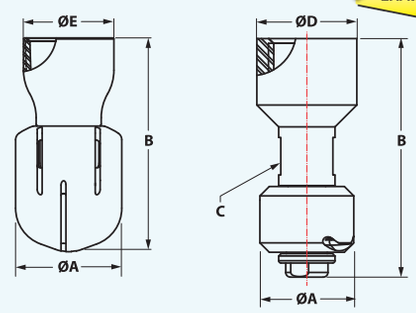


HWS52 HWM

## What are the Benefits of Reactionary Force Tank Cleaning Nozzles?

**Rotating tank cleaning nozzles generate rotation using the force of the cleaning fluid. They provide more mechanical force than traditional static spray balls, resulting in faster, more effective cleaning. This leads to significant resource savings and increased production.**

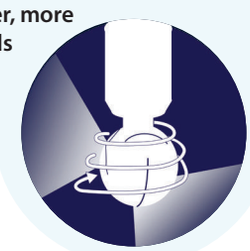

BETE Nozzles

### HydroWhirl® Stinger (HWS) Flow Rates and Coverage

**Pattern:** Tank Washing **Spray Angle:** 360° **Material:** 316L Stainless Steel Body, Ceramic Bearings

| Female Inlet Connection | Model | Spray Angle | Flow Rate (GPM) @ Differential Pressure (PSI) 10 PSI | 20 PSI | 30 PSI | 40 PSI | 50 PSI | 60 PSI | Max Free Passage (in) | Coverage Dia @ 40 PSI (ft) |
|---|---|---|---|---|---|---|---|---|---|---|
| 1/8 FNPT Model | 6212052 | 360° | 1.09 | 1.51 | 1.83 | **2.10** | 2.33 | 2.54 | 0.025 | 2 |
| | 6212051 | | 2.05 | 2.86 | 3.48 | **4.00** | 4.46 | 4.87 | 0.039 | 7 |
| 3/8 FNPT Model | 6211903 | | 4.94 | 7.03 | 8.64 | **10.0** | 11.2 | 12.3 | 0.024 | 8 |
| | 6211905 | | 8.59 | 12.1 | 14.8 | **17.0** | 19.0 | 20.8 | 0.079 | 10 |
| 1/2 FNPT Model | 6211907 | | 10.2 | 14.3 | 17.4 | **20.0** | 22.3 | 24.3 | 0.039 | 10 |
| | 6211902 | | 12.9 | 18.3 | 22.5 | **26.0** | 29.1 | 31.9 | 0.064 | |

### Dimensions for Metal Only (in)

| Pipe Size | A | B | E | Wt (oz) | Min Tank Entry Dia |
|---|---|---|---|---|---|
| 1/8 FNPT | 0.60 | 1.25 | 0.50 | 1.00 | 0.60 |
| 3/8 FNPT | 0.85 | 1.81 | 0.75 | 1.41 | 0.85 |
| 1/2 FNPT | 1.35 | 2.38 | 0.95 | 4.73 | 1.35 |

### HydroWhirl® Stinger (HWS) Flow Rates and Coverage

**Pattern:** Tank Washing **Spray Angle:** 360° **Material:** 316L Stainless Steel Body, Ceramic Bearings

| Female Inlet Connection | Model | Spray Angle | Flow Rate (L/min) @ Differential Pressure (BAR) 0.7 BAR | 1 BAR | 2 BAR | 3 BAR | 4 BAR | Max Free Passage (mm) | Coverage Dia @ 2 BAR (m) |
|---|---|---|---|---|---|---|---|---|---|
| 1/8 FNPT Model | 6212052 | 360° | 4.15 | 4.92 | 6.83 | **8.27** | 9.48 | 0.64 | 0.6 |
| | 6212051 | | 7.80 | 9.27 | 13.0 | **15.8** | 18.1 | 0.99 | 2 |
| 3/8 FNPT Model | 6211903 | | 18.8 | 22.6 | 32.1 | **39.5** | 45.7 | 0.61 | 2 |
| | 6211905 | | 32.8 | 39.1 | 54.9 | **67.1** | 77.3 | 2.00 | 3 |
| 1/2 FNPT Model | 6211907 | | 39.0 | 46.3 | 64.8 | **78.9** | 90.6 | 0.99 | 3 |
| | 6211902 | | 49.0 | 58.8 | 83.6 | **103** | 119 | 1.63 | |

Flow Rate L/min = K $\sqrt{BAR}$

### Dimensions for Metal Only (mm)

| Pipe Size | A | B | E | Wt (g) | Min Tank Entry Dia |
|---|---|---|---|---|---|
| 1/8 FNPT | 15.2 | 31.7 | 12.8 | 28.3 | 15.2 |
| 3/8 FNPT | 21.6 | 45.2 | 19.1 | 40.0 | 21.6 |
| 1/2 FNPT | 34.3 | 60.3 | 24.1 | 134 | 34.3 |

### HydroWhirl® Mini (HWM) Flow Rates and Coverage

**Pattern:** Tank Washing **Spray Angle:** 360° **Material:** 316L Stainless Steel Body, PEEK Slide-Bearings

| Female Inlet Connection | Model | Spray Angle | Flow Rate (GPM) @ Differential Pressure (PSI) 10 PSI | 20 PSI | 30 PSI | 40 PSI | 50 PSI | 60 PSI | Max Free Passage (in) | Coverage Dia @ 40 PSI (in) |
|---|---|---|---|---|---|---|---|---|---|---|
| 3/8 FNPT Model | 6208384 | 360° | 3.64 | 5.22 | 6.45 | **7.50** | 8.43 | 9.27 | 0.06 | 6 |

### Dimensions for Metal Only (in)

| Pipe Size | A | B | C | D | Wt (oz) |
|---|---|---|---|---|---|
| 3/8 FNPT | 0.81 | 2.00 | 0.44 | 0.70 | 2.60 |

### HydroWhirl® Mini (HWM) Flow Rates and Coverage

**Pattern:** Tank Washing **Spray Angle:** 360° **Material:** 316L Stainless Steel Body, PEEK Slide-Bearings

| Female Inlet Connection | Model | Spray Angle | Flow Rate (L/min) @ Differential Pressure (BAR) 0.7 BAR | 1 BAR | 2 BAR | 3 BAR | 4 BAR | Max Free Passage (mm) | Coverage Dia @ 3 BAR (m) |
|---|---|---|---|---|---|---|---|---|---|
| 3/8 FNPT Model | 6208384 | 360° | 13.9 | 16.7 | 24.0 | **29.7** | 34.5 | 1.52 | 2 |

Flow Rate L/min = K $\sqrt{BAR}$

### Dimensions for Metal Only (mm)

| Pipe Size | A | B | C | D | Wt (g) |
|---|---|---|---|---|---|
| 3/8 FNPT | 20.3 | 50.8 | 12.7 | 17.8 | 73.7 |

# Rotating Tank Cleaning Nozzles

## HydroWhirl® Poseidon (HWP) & HydroWhirl® Disc (HWD)

**Series: HydroWhirl Poseidon (HWP)**
**Material:** PTFE, 316L Stainless Steel Retaining Clip

**Series: HydroWhirl Disc (HWD)**
**Materials:** 316L Stainless Steel, PTFE Slide Bearing

### HWP Models

Manufactured from FDA-compliant, corrosion-resistant PTFE, the HWP rotating spray nozzle is highly versatile, making it ideal for Clean-In-Place (CIP) applications in the food and beverage industry and for use in harsh chemical processing environments. Its slow-spinning design delivers longer spray dwell times on target surfaces, resulting in greater cleaning impact.

### HWD Models

BETE's HWD spray nozzle is a powerful, fully submersible rotating tank cleaner designed for cleaning small to medium-sized tanks. This rotary head is fluid-driven and self-flushing for minimal maintenance. Its 360° spray pattern produces high-impact washing with consistent repetition to clean the tank effectively and efficiently.

## Dimensions

DOWNLOAD drawings at EXAIR.com

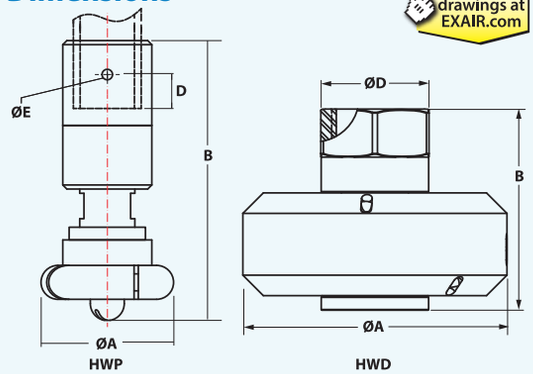


## Guideline for nozzle placement:

**(H/3) Nozzle = 1/3 Overall Tank Height (H).**

**Ideal nozzle placement is approximately 1/3 the height from the top of the tank.**

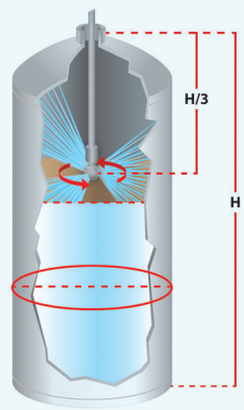


The HWP stands out as one of the only rotary tank cleaners on the market constructed of 100% PTFE. PTFE is extremely corrosion-resistant and has one of the lowest friction coefficients of any material.

The unique HWD can be completely submerged in the tank and effectively cleans small to medium-sized tanks.

### HydroWhirl Poseidon (HWP) Flow Rates and Dimensions

**Pattern:** Tank Washing **Spray Angle:** 360° **Material:** PTFE Nozzle, 316L Stainless Steel Retaining Clip

| Connection Type | Model | Spray Angle | Flow Rate (GPM @ PSI) | | | | | | Dimensions (in) | | | | Wt (oz) | Coverage Dia (ft) @ 40 PSI |
|---|---|---|---|---|---|---|---|---|---|---|---|---|---|---|
| | | | 10 PSI | 20 PSI | 30 PSI | 40 PSI | 50 PSI | 60 PSI | A | B | D MAX | E | | |
| 1/2 FNPT | 6174366 | 360° | 4.45 | 6.31 | 7.75 | **8.96** | 10.0 | 11.0 | 1.68 | 3.94 | 0.50 | 0.09 | 3 | 9 |
| 1 Tube Clip-On | 6182138 | | 10.7 | 15.2 | 18.6 | **21.5** | 24.0 | 26.3 | 1.95 | 4.12 | 0.50 | 0.16 | 4 | 14 |

### HydroWhirl Poseidon (HWP) Flow Rates and Dimensions

**Pattern:** Tank Washing **Spray Angle:** 360° **Material:** PTFE Nozzle, 316L Stainless Steel Retaining Clip

| Connection Type | Model | Spray Angle | Flow Rate (L/min @ BAR) | | | | | | Dimensions (mm) | | | | Wt (g) | Coverage Dia (m) @ 2.8 BAR |
|---|---|---|---|---|---|---|---|---|---|---|---|---|---|---|
| | | | 0.5 BAR | 1 BAR | 1.5 BAR | 2 BAR | 3 BAR | 4 BAR | A | B | D MAX | E | | |
| 1/2 FNPT | 6174366 | 360° | 14.3 | 20.3 | 24.9 | 28.8 | **35.4** | 40.9 | 42.7 | 100.1 | 12.7 | 2.4 | 85.0 | 2.7 |
| 1 Tube Clip-On | 6182138 | | 34.6 | 49.0 | 60.0 | 69.3 | **84.9** | 98.0 | 49.5 | 104.6 | 12.7 | 4.1 | 113 | 4.3 |

NOTE: Flow rates represent threaded connections with a 360° spray angle. Flow rates may vary slightly for clip-on connections.

### HydroWhirl® Disk (HWD) Flow Rates and Coverage

**Pattern:** Tank Washing **Spray Angle:** 360° **Material:** 316L Stainless Steel Body, PEEK Slide-Bearing

| Female Inlet Connection | Model | Spray Angle | Flow Rate (GPM) @ Differential Pressure (PSI) | | | | | | Max Free Passage (in) | Coverage Dia @ 40 PSI (ft) |
|---|---|---|---|---|---|---|---|---|---|---|
| | | | 10 PSI | 20 PSI | 30 PSI | 40 PSI | 50 PSI | 60 PSI | | |
| 1 FNPT | 6211162 | 360° | 25.3 | 35.5 | 43.4 | **50.0** | 55.8 | 61.1 | 0.13 | 11 |

### Dimensions (in)

| Pipe Size | A | B | D | Wt (oz) |
|---|---|---|---|---|
| 1 FNPT | 3.88 | 2.94 | 1.56 | 41 |

### HydroWhirl® Disk (HWD) Flow Rates and Coverage

**Pattern:** Tank Washing **Spray Angle:** 360° **Material:** 316L Stainless Steel Body, PEEK Slide-Bearing

| Female Inlet Connection | Model | Spray Angle | Flow Rate (L/min) @ Differential Pressure (BAR) | | | | | Max Free Passage (mm) | Coverage Dia @ 2 BAR (m) |
|---|---|---|---|---|---|---|---|---|---|
| | | | 0.7 BAR | 1 BAR | 2 BAR | 3 BAR | 4 BAR | | |
| 1 FNPT | 6211162 | 360° | 96.3 | 115 | 162 | **198** | 227 | 3.30 | 3 |

### Dimensions (mm)

| Pipe Size | A | B | D | Wt (g) |
|---|---|---|---|---|
| 1 FNPT | 98.4 | 74.8 | 40.6 | 1162 |